North Carolina Department of Labor
Division of Occupational Safety and Health

Raleigh, NC

Chapter 7 CFR Revision 175
Subchapter 7F

Field Information System
Roll-Over Protective Structures
29 CFR 1926.1002
29 CFR 1926.1003
29 CFR 1926 Subpart C - Appendix W
29 CFR 1928.51
29 CFR 1928.52
29 CFR 1928.53
29 CFR 1928 Subpart C – Appendix B

Direct Final Rule

A. **Discussion.**

In 1996, federal OSHA issued technical amendments revising the standards that regulate testing of roll-over protective structures (ROPS) used to protect employees who operate wheel-type tractors. This revision removed the original ROPS standards and replaced them with references to national consensus standards for ROPS-testing requirements. OSHA believed that the national consensus standards essentially duplicated the ROPS standards they replaced, and that any differences between them were not substantive. Subsequently, OSHA identified several substantive differences between the national consensus standards and the original ROPS standards.

On December 29, 2005, federal OSHA issued a direct final rule to reinstate the original ROPS standards. The reinstated ROPS standards for both construction and agriculture also contain a number of minor revisions that OSHA believes are not substantive and will improve comprehension of, and compliance with, the standards.

B. **Action.**

The N.C. Commissioner of Labor adopted this final rule verbatim with an effective date of May 30, 2006. Refer to the 12/29/2005 *Federal Register* (Vol. 70, No. 249) for the details related to these requirements.

Signed on Original
Allen McNeely
Director

5/30/06
Date of Signature

NC Effective Date: May 30, 2006
NCAC Number: 13 NCAC 7F.0200 and 13 NCAC 7F.0300

List of Subjects

14 CFR Part 121

Air carriers, Aircraft, Aviation safety, Reporting and recordkeeping requirements, Safety, Transportation.

14 CFR Part 125

Aircraft, Aviation safety, Reporting and recordkeeping requirements.

14 CFR Part 135

Air taxis, Aircraft, Aviation safety, Reporting and recordkeeping requirements.

14 CFR Part 145

Aircraft, Aviation safety, Reporting and recordkeeping requirements.

The Amendment

■ In consideration of the foregoing, the Federal Aviation Administration withdraws the final rule published at 65 FR 56192 on September 15, 2000 and delayed at 66 FR 21626, April 30, 2001; 66 FR 58912, November 23, 2001; 67 FR 78970, December 27, 2002; and 68 FR 75116, December 30, 2003. The FAA also amends Chapter I of Title 14, Code of Federal Regulations as follows:

PART 121—OPERATING REQUIREMENTS: DOMESTIC, FLAG, AND SUPPLEMENTAL OPERATIONS

■ 1. The authority citation for part 121 continues to read as follows:

Authority: 49 U.S.C. 106(g), 40113, 40119, 41706, 44101, 44701–44702, 44705, 44709–44711, 44713, 44716–44717, 44722, 44901, 44903–44904, 44912, 45101–45105, 46105, 46301.

§ 121.703 Service difficulty reports.

■ 2. Amend § 121.703 to revise the heading as set forth above and to revise paragraphs (d) and (e) introductory text to read as follows:

* * * * *

(d) Each certificate holder shall submit each report required by this section, covering each 24-hour period beginning at 0900 local time of each day and ending at 0900 local time on the next day, to the FAA offices in Oklahoma City, Oklahoma. Each report of occurrences during a 24-hour period shall be submitted to the collection point within the next 96 hours. However, a report due on Saturday or Sunday may be submitted on the following Monday, and a report due on a holiday may be submitted on the next work day.

(e) The certificate holder shall submit the reports required by this section on a form or in another format acceptable to the Administrator. The reports shall include the following information:

* * * * *

■ 3. Amend § 121.705 to revise the introductory text to read as follows:

§ 121.705 Mechanical interruption summary report.

Each certificate holder shall submit to the Administrator, before the end of the 10th day of the following month, a summary report for the previous month of:

* * * * *

PART 125—CERTIFICATION AND OPERATIONS: AIRPLANES HAVING A SEATING CAPACITY OF 20 OR MORE PASSENGERS OR A MAXIMUM PAYLOAD CAPACITY OF 6,000 POUNDS OR MORE; AND RULES GOVERNING PERSONS ON BOARD SUCH AIRCRAFT

■ 4. The authority citation for part 125 continues to read as follows:

Authority: 49 U.S.C. 106(g), 40113, 44701–44702, 44705, 44710–44711, 44713, 44716–44717, 44722.

§ 125.409 Service difficulty reports.

■ 5. Amend § 125.409 to revise the heading as set forth above and to revise paragraph (b) to read as follows:

* * * * *

(b) Each certificate holder shall submit each report required by this section, covering each 24-hour period beginning at 0900 local time of each day and ending at 0900 local time on the next day, to the FAA office in Oklahoma City, Oklahoma. Each report of occurrences during a 24-hour period shall be submitted to the collection point within the next 96 hours. However, a report due on Saturday or Sunday may be submitted on the following Monday, and a report due on a holiday may be submitted on the next work day.

PART 135—OPERATING REQUIREMENTS: COMMUTER AND ON-DEMAND OPERATIONS AND RULES GOVERNING PERSONS ON BOARD SUCH AIRCRAFT

■ 6. The authority citation for part 135 continues to read as follows:

Authority: 49 U.S.C. 106(g), 41706, 44113, 44701–44702, 44705, 44709, 44711–44713, 44715–44717, 44722.

§ 135.415 Service difficulty reports.

■ 7. Amend § 135.415 to revise the heading as set forth above and to revise paragraph (d) to read as follows:

* * * * *

(d) Each certificate holder shall submit each report required by this section, covering each 24-hour period beginning at 0900 local time of each day and ending at 0900 local time on the next day, to the FAA offices in Oklahoma City, Oklahoma. Each report of occurrences during a 24-hour period shall be submitted to the collection point within the next 96 hours. However, a report due on Saturday or Sunday may be submitted on the following Monday, and a report due on a holiday may be submitted on the next workday.

* * * * *

PART 145—REPAIR STATIONS

■ 8. The authority citation for part 145 continues to read as follows:

Authority: 49 U.S.C. 106(g), 40113, 44701–44702, 44707, 44709, 44717.

§ 145.221 Service difficulty reports.

■ 9. Amend § 145.221 to revise the heading as set forth above and to revise paragraph (d) introductory text to read as follows:

* * * * *

(d) A certificated repair station may submit a service difficulty report for the following:

* * * * *

Issued in Washington, DC, on December 22, 2005.

Marion C. Blakey,

Administrator.

[FR Doc. 05–24536 Filed 12–28–05; 8:45 am]

BILLING CODE 4910–13–P

DEPARTMENT OF LABOR

Occupational Safety and Health Administration

29 CFR Parts 1926 and 1928

[Docket No. S–270–A]

RIN 1218–AC15

Roll-Over Protective Structures

AGENCY: Occupational Safety and Health Administration (OSHA), DOL.

ACTION: Direct final rule.

SUMMARY: In 1996, OSHA published a technical amendment revising the construction and agriculture standards that regulate testing of roll-over protective structures (''ROPS'') used to protect employees who operate wheel-type tractors. This revision removed the original ROPS standards and replaced them with references to national consensus standards for ROPS-testing

requirements. The Agency believed that the national consensus standards essentially duplicated the ROPS standards they replaced, and that any differences between them were not substantive. Subsequently, OSHA identified several substantive differences between the national consensus standards and the original ROPS standards. Therefore, the Agency is reinstating the original ROPS standards by issuing this direct final rule. The reinstated ROPS standards for both construction and agriculture also contain a number of minor revisions that OSHA believes are not substantive and will improve comprehension of, and compliance with, the standards.

DATES: This direct final rule will become effective on February 27, 2006 unless significant adverse comment is received by January 30, 2006. If OSHA receives significant adverse comment, it will publish a timely withdrawal of this rule. Submit comments to this direct final rule by the following dates:

Hard copy: Submit (i.e., postmarked or sent) comments by *regular mail, express delivery, hand delivery, and courier service* by January 30, 2006.

Electronic transmission and facsimile: Submit comments by January 30, 2006.

The incorporation by reference of specific publications listed in this direct final rule is approved by the Director of the Federal Register as of February 27, 2006.

ADDRESSES: Submit written comments to this direct final rule—identified by docket number S–270–A or RIN number 1218–AC15—by any of the following methods:

- *Federal eRulemaking Portal: http://www.regulations.gov.* Follow the instructions for submitting comments.
- *OSHA's Web site: http://dockets.osha.gov/.* Follow the instructions for submitting comments.
- *Facsimile:* When written comments are 10 pages or fewer, fax them to the OSHA Docket Office at (202) 693–1648.
- *Regular mail, express delivery, hand delivery, and courier service:* Submit three copies to the OSHA Docket Office, Docket No. S–270–A, U.S. Department of Labor, 200 Constitution Avenue, NW., Room N–2625, Washington, DC 20210; telephone: (202) 693–2350. (OSHA's TTY number is (877) 889–5627.) Please note that security-related problems may result in significant delays in receiving comments and other written materials by regular mail. Telephone the OSHA Docket Office at (202) 693–2350 for information regarding security procedures concerning delivery of materials by express delivery, hand delivery, and messenger service. The hours of operation for the Docket Office are 8:15 a.m. to 4:45 p.m., EST.

Additional materials: When a commenter would like to submit additional materials (e.g., studies, journal articles) to supplement comments that were submitted electronically or by facsimile, these materials must be sent, in triplicate hard copy, to the OSHA Docket Office, Technical Data Center, Room N–2625, OSHA, U.S. Department of Labor, 200 Constitution Ave., NW., Washington, DC 20210. These materials must clearly identify the sender's name, date, subject, and docket number (S–270–A) or RIN number (1218–AC15) to enable the Agency to attach them to the appropriate comments.

Personal information: OSHA will make available to the public, without revision, all comments and other materials submitted to the docket, including any personal information. Therefore, the Agency cautions commenters about submitting statements they do not want made available to the public, or submitting comments that contain personal information (either about themselves or others) such as social security numbers, birth dates, and medical data.

FOR FURTHER INFORMATION CONTACT: For general information and press inquiries, contact Mr. Kevin Ropp, Director, Office of Communications, OSHA, U.S. Department of Labor, Room N–3637, 200 Constitution Avenue, NW., Washington, DC 20210; telephone: (202) 693–1999; fax: (202) 693–1634. For technical inquiries, contact Mr. Mark Hagemann, Acting Director, Office of Safety Systems, OSHA, U.S. Department of Labor, Room N–3609, 200 Constitution Avenue, NW., Washington, DC 20210; telephone: (202) 693–2255; fax: (202) 693–1663. For detailed instructions on submitting comments and for additional information on the rulemaking process, see the ''Public Participation'' heading under the section below titled **SUPPLEMENTARY INFORMATION.**

SUPPLEMENTARY INFORMATION:

Table of Contents

I. Direct Final Rulemaking
II. Summary and Explanation of the Rulemaking
A. Basis for the Rulemaking
B. Substantive Differences Between the Standards
C. Minor Revisions to the Original OSHA ROPS Standards
III. Procedural Determinations
A. Legal Considerations
B. Economic Analysis and Regulatory Flexibility Certification
C. Paperwork Reduction Act
D. Federalism
E. State-Plan States
F. Unfunded Mandates Reform Act
G. Public Participation
List of Subjects
Authority and Signature
IV. Amended Standards

I. Direct Final Rulemaking

The Agency uses direct final rulemaking when it expects that a rule will not be controversial. Examples of such rules include minor substantive revisions to regulations, incorporation by reference of the latest edition of a technical or industry consensus standard, and direct incorporations of mandates from new legislation. In direct final rulemaking, OSHA publishes a final rule in the **Federal Register** with a statement that, unless it receives a significant adverse comment by a specified date, the rule will become effective on a designated date thereafter.

OSHA believes that the subject of this rulemaking is suitable for a direct final rule. The Agency bases this decision on substantive differences found between the original OSHA standards on roll-over protective structures (''ROPS'') for the construction and agriculture industries and the national consensus standards issued by the Agency under a 1996 technical amendment to replace the original standards. By replacing the original ROPs testing provisions through a technical amendment, OSHA denied the regulated community an opportunity for notice-and-comment on these substantive differences as required under the Administrative Procedures Act (5 U.S.C. 553(b)) and the Occupational Safety and Health Act of 1970 (29 U.S.C. 655(b)(2) and (b)(3)). Therefore, the Agency has concluded that it has a legal obligation to the regulated community to reinstate the original OSHA standards through this direct final rule. (See section II.A below (''Basis for the Rulemaking'') for a detailed discussion of the Agency's legal analysis of this issue.)

Having concluded that this reinstatement action constitutes a binding legal obligation, the Agency will consider as significant adverse comments only those comments that address: (1) The lawfulness of the procedures used to promulgate the 1996 technical amendment as these procedures relate to the ROPs testing provisions; and (2) whether the minor revisions made to the original ROPS standards in this direct final rule (see a description of these revisions under section II.C of this preamble) are reasonable or appropriate.

The Agency often publishes an identical proposed rule simultaneously

with a direct final rule. In this instance, however, OSHA is not publishing a companion proposed rule. Should OSHA receive any significant adverse comments to this direct final rule, it will withdraw the rule and determine, based on the comments submitted to the record, whether to issue a proposed rule in the future. Accordingly, if OSHA receives timely significant adverse comments on the two issues described in the previous paragraph, it will publish notice of the significant adverse comments in the **Federal Register** and withdraw this direct final rule no later than February 27, 2006.

II. Summary and Explanation of the Rulemaking

A. Basis for the Rulemaking

On March 7, 1996, OSHA published a technical amendment in the **Federal Register** that revised a number of its standards. Section II.G of the amendment revised the construction and agriculture standards that regulate testing of roll-over protective structures (''ROPS''); employers use these structures to protect employees who operate wheel-type tractors. (See 61 FR 9228.) ROPS testing determines the capacity of ROPS components to absorb energy (i.e., withstand fracturing) during loadings administered under field and/or laboratory conditions, and under different temperature conditions. The revision removed the original, detailed ROPS-testing standards and referred instead to national consensus standards for substantive ROPS-testing requirements. The 1996 technical amendment was part of an OSHA initiative to ''undertake a line-by-line review of * * * regulations to determine where they could be simplified or clarified'' (61 FR 9228).

The Administrative Procedures Act (APA) (5 U.S.C. 553(b)), the Occupational Safety and Health Act of 1970 (OSH Act) (29 U.S.C. 655(b)(2) and (b)(3)), and OSHA's procedural regulations (29 CFR 1911.5) require that OSHA provide notice and an opportunity for comment during substantive rulemaking. However, in the preamble to the 1996 technical amendment, the Agency noted that the technical amendment did not revise the original ROPS standards in any material fashion, and that ''[t]he substantive requirements are unchanged'' between the original ROPS standards and the consensus standards that replaced them (61 FR 9229). For this reason, OSHA determined that the technical amendment did not require notice and an opportunity for comment because it satisfied the ''unnecessary'' exemption specified by the APA (5 U.S.C. 553(b).[1] Relying on the ''unnecessary'' exemption to notice and comment, the Agency stated:

> OSHA has determined that this rulemaking is not subject to the procedures for public notice-and-comment rulemaking specified under section 4 of the Administrative Procedure Act (5 U.S.C. 553) or sec. 6(b) of the Occupational Safety and Health Act of 1970 (29 U.S.C. 655(b)) because this rulemaking does not affect the substantive requirements or coverage of the standards involved. This rulemaking does not modify or revoke existing rights and obligations, and new rights and obligations have not been established. Under this rulemaking, the Agency is merely correcting or clarifying existing regulatory requirements. OSHA therefore finds that public notice-and-comment procedures are unnecessary within the meaning of 5 U.S.C. 553(b)(3)(B) and 29 CFR 1911.5. (61 FR 9229.)

Several years after issuing the 1996 technical amendment, the Agency was informed that several of the original OSHA ROPS provisions differed substantively from the national consensus standards for the construction and agriculture industries (Ex. 4–7). In response to this information, the Agency conducted a thorough evaluation of its original ROPS standards and the ROPS testing requirements contained in the national consensus standards referenced in its current construction and agriculture ROPS standards. OSHA has included in the docket for this rulemaking four side-by-side comparisons of the differences found between the original OSHA standards and the referenced national consensus standards (Exs. 4–1 to 4–4).

Based on the findings of this evaluation, which are described in detail in the following section, the Agency has concluded that differences do exist between its original construction and agriculture ROPS standards and the ROPS standards implemented under the 1996 technical amendment, that these differences have a substantial impact on the regulated community, and that OSHA incorrectly applied the APA's ''unnecessary'' exemption to the ROPs testing procedures. This conclusion is consistent with existing case law. For example, in *Utility Solid Waste Activities Group* v. *Environmental Protection Agency*, 236 F.3d 749 (D.C. Cir. 2001), the court found that an EPA technical amendment had a significant impact on the regulated community and, most importantly, that it did not meet any of the three exemptions to notice-and-comment rulemaking specified by the APA i.e., 5 U.S.C. 553(b)(B) (*Id.* at 754)). In vacating the technical amendment, the court stated, ''The amendment * * * constituted agency action 'without observance of [the] procedure required by law' and, as such, it is 'unlawful and set aside.' 5 U.S.C. 706(2)(D).''

The substantive differences found between the standards and the legal analysis described in the preceding paragraphs support the Agency's conclusion that reinstating the original OSHA standards through this direct final rule is necessary and appropriate. Specifically, the Agency is revoking the references to the national consensus standards for ROPS testing located in paragraphs 29 CFR 1926.1002(a)(i), 1926.1003(a)(i), and 1928.51(b)(1) and reinstating in the construction and agriculture standards the original OSHA ROPS testing provisions. For both the reinstated construction and agriculture ROPS standards, the Agency also has made a number of minor revisions to its original ROPS standards. OSHA believes that these minor revisions will improve comprehension of, and compliance with, the reinstated standards without making substantive revisions.

The following section highlights the substantive differences between its original ROPS testing requirements and the testing provisions of the consensus standards referenced in its current ROPS construction and agriculture standards. The Agency describes in section II.C below the minor revisions it is making to the original OSHA ROPS standards under this direct final rule.

B. Substantive Differences Between the Standards

Construction standards. In revising the ROPS standards for construction in the 1996 technical amendment, the Agency deleted paragraphs (c) through (i) and (k) from 29 CFR 1926.1002, which addressed testing of protective frames for wheel-type tractors used in construction, and replaced them with a reference to Society of Automotive Engineers (''SAE'') consensus standard J334a–1970 in paragraph (a)(1) of revised 29 CFR 1926.1002. The Agency also revised 29 CFR 1926.1003, specifying testing requirements for overhead protection used with tractors, by removing paragraphs (c) through (g) and substituting a reference to SAE consensus standard J167–1970 in paragraph (a)(1) of the revised standard.

While most of the revisions to the construction ROPS standards made in the 1996 technical amendment were nonsubstantive, the Agency identified

[1] The three exemptions Specified by this provision of the APA are: Impracticable, unnecessary and contrary to the public interest.

two substantive revisions. The first revision involved paragraph (c)(1) of original 29 CFR 1926.1002, which allowed the regulated community to use *either* a laboratory test *or* a field test for impact testing, while the SAE standard requires *both* tests. Accordingly, this direct final rule reinstates the impact-testing option provided by paragraph (c)(1) of original 29 CFR 1926.1002, and which is not available in the SAE standard. (See Ex. 4–1.)

The second revision addressed paragraphs (i)(ii) of original 29 CFR 1926.1002 and (f)(1) of original 29 CFR 1926.1003, in combination with paragraph (f)(2)(iv) of 29 CFR 1926.1001. These paragraphs permitted manufacturers to conduct the required performance tests using either zero-degree Fahrenheit (0 °F) testing or Charpy V-notch testing, while the SAE standard specifies that performance tests must be conducted only at 0 °F.[2] Therefore, reinstating the original OSHA standards will provide an additional cold-temperature testing option not available in the SAE standard. (See Exs. 4–1 and 4–2.)

Agriculture standards. In revising the ROPS standards for the agriculture industry, the Agency deleted entirely original 29 CFR 1928.52 and 1928.53, as well as Appendix B to subpart C of 29 CFR part 1928. The deleted standards specified procedures for testing, respectively, protective frames and enclosures for wheel-type tractors used in agriculture, while Appendix B provided diagrams depicting these testing procedures. In place of these requirements, OSHA referenced SAE consensus standard J334a–1970 and American Society of Agricultural Engineers (''ASAE'') consensus standard S306.3–1974 for protective frames, and SAE consensus standard J168–1970 and ASAE consensus standard S336.1–1974 for protective enclosures, in paragraph (b)(1) of revised 29 CFR 1928.51.

For both protective frames and protective enclosures, the testing conducted under the ASAE and SAE standards generally is consistent with the testing requirements of the original OSHA standards. However, the Agency found several substantive differences between the original OSHA standards and the consensus standards (for testing both protective frames and protective enclosures) that replaced them. First, both the original OSHA standards and the ASAE standards differ substantively from the SAE standards by providing an exemption from field-upset testing based on results for either the static or dynamic versions of the laboratory energy-absorption test,[3] while the SAE standards require field-upset testing only under dynamic test conditions. Consequently, this direct final rule will reinstate the testing exemption found in the original OSHA ROPS standards. (See Exs. 4–3 and 4–4.) Second, the original OSHA and the SAE standards allow either static or dynamic testing at 0 °F, while the ASAE standards limit testing at 0 °F to dynamic testing. Therefore, reinstating the original OSHA standards under this direct final rule restores the testing option found in the original OSHA standards, but which is not in the ASAE standards. (See Exs. 4–3 and 4–4.) Finally, as an alternative to 0 °F testing, the original OSHA and ASAE standards offer the Charpy V-notch test, while the SAE standards do not. Accordingly, reinstating the original OSHA standard will provide an additional cold-temperature testing option not available in the SAE standards. (See Exs. 4–3 and 4–4.)

C. Minor Revisions to the Original OSHA ROPS Standards

Paragraph (c)(1) of OSHA's original 29 CFR 1926.1002 contains an editorial error. The original paragraph states that laboratory or field tests ''determine the performance requirements set forth in paragraph (c)(1) of this [standard].'' However, paragraph (i) of the standard, not paragraph (c)(1), provides the performance requirements that the tests must determine. Therefore, OSHA is correcting the reference accordingly.

The Agency also is making two additional revisions related to the original construction standards for ROPS. First, as noted in Ex. 4–1, paragraph 5.3.2 of SAE consensus standard J334a–1970 defines the term ''P_u'' as the ''[u]ltimate force capacity of mounting connection, lb (kg).'' However, paragraph (j)(3) of original 29 CFR 1926.1002 lists no definition for this term. Since the original OSHA standard duplicates the remaining terminology of the SAE consensus standard, this rulemaking will add this term and the SAE consensus standard definition to reinstated 29 CFR 1926.1002(j)(3). Second, in reinstating the original 29 CFR 1926.1002 and 1926.1003 standards, OSHA is removing the following sentence from paragraphs (k) and (g) of these respective standards: ''The SAE standard shall be used in the event that questions of interpretation arise.'' The Agency is removing this sentence because the referenced SAE standard provides no additional information on which to base such interpretations.

Finally, the Agency is making a number of plain-language revisions to the regulatory text of the original OSHA ROPS standards for the construction and agriculture industries. The Agency finds that using plain language will improve the comprehensibility of these provisions. These improvements will, in turn, enhance employer compliance with the revised provisions and, concomitantly, increase the protection afforded to employees. OSHA believes that rewriting these provisions in plain language did not alter the substantive requirements of the existing provisions.

III. Procedural Determinations

A. Legal Considerations

The purpose of the Occupational Safety and Health Act of 1970 (''OSH Act''), 29 U.S.C. 651 et seq., is ''to assure so far as possible every working man and woman in the nation safe and healthful working conditions and to preserve our human resources.'' (29 U.S.C. 651(b).) To achieve this goal, Congress authorized the Secretary of Labor to promulgate and enforce occupational safety and health standards. (29 U.S.C. 655(b) and 654(b).) A safety or health standard is a standard ''which requires conditions, or the adoption or use of one or more practices, means, methods, operations, or processes, reasonably necessary or appropriate to provide safe or healthful employment or places of employment.'' (29 U.S.C. 652(8).) A standard is reasonably necessary or appropriate within the meaning of Section 652(8) when a significant risk of material harm exists in the workplace and the standard will reduce substantially or eliminate that workplace risk.

[2] These two tests determine, under controlled laboratory conditions, the reduced-temperature ductility of the carbon steel used to make ROPS. Generally, the less ductile the steel, the more likely it is to fracture with impact during reduced-temperature exposure (thereby losing its protective features). The 0 °F test, used principally by ROPS manufacturers, involves administering impacts and/or loads to the entire ROPS at 0 °F, while the Charpy V-notch test, used primarily by steel manufacturers, applies impacts to steel specimens of a predetermined size at several reduced-temperature levels.

[3] The laboratory energy-absorption test assesses the energy (measured as force multiplied by distance) absorbed by ROPS during laboratory-controlled rear and side impacts. During testing, ROPS components bend as they absorb energy; however, such bending must not exceed the deflection values specified by the OSHA standards (these values represent thresholds beyond which the deflection may endanger the tractor operator). Generally, the tests have a safety margin (e.g., 15%), which means that additional deflection equal to the specified safety margin is possible without jeopardizing safety. The laboratory-based test is derived from the energy-absorbing results obtained for ROPS tested during rear or side field-upset tests, i.e., deflection values are comparable when the same ROPS and tractors are evaluated under the two testing conditions.

OSHA based its original ROPS standards on evidence that these structures are necessary to ensure proper employee protection should wheel-type tractors become unstable and roll backwards or to the side. For this direct final rule, the Agency has determined that the original OSHA construction and agriculture ROPS standards meet the statutory requirements of Section 652(8) of the OSH Act. In addition, OSHA finds that this direct final rule does not increase employers' compliance burdens (see section B (''Economic Analysis and Regulatory Flexibility Certification'') below). Consequently, it is unnecessary to determine significant risk, or the extent to which the direct final rule would reduce that risk, as would typically be required by *Industrial Union Department, AFL–CIO* v. *American Petroleum Institute*, 448 U.S. 607 (1980).

Because OSHA replaced its original ROPs testing provisions through a technical amendment, the regulated community did not have an opportunity for notice and comment on the substantive differences between the original ROPs testing provisions and the consensus standards that replaced them. Such notice and comment are required by the Administrative Procedures Act (5 U.S.C. 553(b)), the Occupational Safety and Health Act of 1970 (29 U.S.C. 655(b)(2) and (b)(3)), and OSHA's procedural regulations (29 CFR 1911.5). Therefore, the Agency has concluded that it has a legal obligation to the regulated community to reinstate the original OSHA standards through this direct final rule.

B. Economic Analysis and Regulatory Flexibility Certification

OSHA's Economic Analysis and Regulatory Flexibility Analysis address issues related to the costs, benefits, technological feasibility, and economic impacts (including small business impacts) of this direct final rule reinstating the Agency's original ROPS standards.

Executive Order (''E.O.'') 12866 requires regulatory agencies to conduct an economic analysis for rules that meet certain criteria. The most frequently used criterion under E.O. 12866 is that the rule will have an annual cost impact on the economy of $100 million or more. Neither the benefits nor the costs of this direct final rule exceed $100 million. Nevertheless, the Agency has prepared this economic analysis to summarize this direct final rule's impact, and has concluded that it is not an economically significant regulatory action under E.O. 12866.

Although this direct final rule applies to employers in construction and agriculture so that their employees may operate safe equipment (i.e., wheel-type tractors), it more directly affects equipment manufacturers. Equipment manufacturers design and build machines that have ROPS to meet the testing criteria specified in OSHA's ROPS standards. Fewer than 10 original equipment manufacturers are directly affected by this direct final rule (see Ex. 4–5). Employers in the construction and agriculture industries who purchase and use wheel-type tractors are in violation of OSHA's ROPS standards and are subject to penalty when the tractors do not have protective structures meeting these standards. Therefore, employers in the construction and agriculture industries would be affected indirectly if changing the ROPS testing procedures were to change the price of equipment.

For the purposes of its economic analyses, OSHA generally defines small firms as firms with fewer than 1,000 employees (using the Small Business Administration's definition); however, the Agency may use smaller size categories as well. None of the original equipment manufacturers affected by this direct final rule is a small employer under any of these definitions. However, some small manufacturing firms (e.g., with fewer than 20 employees) may retrofit older, existing equipment with custom-made ROPS, and these firms may be affected by this direct final rule.

As explained in the preamble above, this direct final rule provides equipment manufacturers with more options for testing ROPS than the current OSHA ROPS standards. Therefore, none of the provisions in the direct final rule impose conditions that would generate new costs for equipment manufacturers, including small manufacturing firms. Cost savings under the direct final rule, if any, depend on the extent that equipment manufacturers choose to avail themselves of its alternative provisions. The Agency has not quantified the benefit of the increased testing options to manufacturers. The reinstated standards are both technologically and economically feasible and do not impose new compliance costs on equipment manufacturers or on the construction and agriculture industries. The Agency concludes that the economic impact of the direct final rule will be negligible on any of the potentially affected industries, including potentially affected small employers.

The Regulatory Flexibility Act of 1980 (''RFA''), as amended by the Small Business Regulatory Enforcement Fairness Act of 1996 (5 U.S.C. 601 et seq.), requires regulatory agencies to determine whether regulatory actions will adversely affect small entities. OSHA's threshold criteria for identifying a significant impact include costs exceeding one percent of revenues or five percent of profits. When costs exceed either threshold, then the Agency considers the impact on small entities to be significant for purposes of complying with the RFA. Employers will incur no significant costs of complying with this direct final rule. Accordingly, OSHA certifies that this regulation will not have a significant impact on a substantial number of small entities. In addition, the direct final rule is not a major rule as defined by Section 804 of the Congressional Review Act (5 U.S.C. 801 *et seq.*).

C. Paperwork Reduction Act

After analyzing the provisions of this direct final rule in terms of the Paperwork Reduction Act of 1995 (44 U.S.C. 3501 *et seq.* and 5 CFR part 1320), OSHA has determined that these provisions do not impose any collection-of-information (i.e., ''paperwork'') requirements on employers in the construction and agriculture industries who use ROPS to protect employees who operate wheel-type tractors. While several of the provisions reinstated by this direct final rule require that test data be recorded or verified (i.e., 29 CFR 1926.1002(d)(3), (d)(6), (g)(2)(i), (g)(2)(ii), and (g)(2)(iii); 1928.52(d)(2)(iii)(A) and (d)(2)(iii)(F); and 1928.53(d)(1)(iii) and (d)(2)(iii)(B)), these information-collection requirements apply only to ROPS manufacturers, not to the employers who use ROPS on wheel-type tractors. OSHA also concludes that, as a matter of usual and customary business practice, manufacturers record and verify ROPS testing information to ensure the integrity of protective frames and enclosures, and notes that the current SAE and ASAE consensus standards for ROPS require that manufacturers record and verify ROPS test data.

Members of the public may send comments on this paperwork determination to: Office of Information and Regulatory Affairs (Attention: Desk Officer for OSHA), OMB, Room 10235, 726 Jackson Place, NW., Washington, DC 20503. However, no comment received on this paperwork determination will be considered by the Agency to be a ''significant adverse comment'' as specified above under section I (''Direct Final Rulemaking'').

D. Federalism

The Agency reviewed the direct final rule according to the most recent Executive Order (''E.O.'') on Federalism (Executive Order 13132, 64 FR 43225, August 10, 1999). This E.O. requires that Federal agencies, to the extent possible, refrain from limiting State policy options, consult with States before taking actions that restrict their policy options, and take such actions only when clear constitutional authority exists and the problem is national in scope. The E.O. allows Federal agencies to preempt State law only with the expressed consent of Congress. In such cases, Federal agencies must limit preemption of State law to the extent possible.

Under Section 18 of the Occupational Safety and Health Act of 1970 (''OSH Act''; 29 U.S.C. 651 *et seq.*), Congress expressly provides OSHA with authority to preempt State occupational safety and health standards. Under the OSH Act, a State can avoid preemption under Section 18 only when it submits, and obtains Federal approval of, a plan for the development and enforcement of safety and health standards (i.e., ''State-Plan State''; see 29 U.S.C. 667). Occupational safety and health standards developed by a State-Plan State must be at least as effective in providing safe and healthful employment and places of employment as the Federal standards. Subject to these requirements, a State-Plan State is free to develop and enforce under State law its own requirements for safety and health standards.

The Agency concludes that this direct final rule complies with E.O. 13132. In States without OSHA-approved State Plans, Congress expressly provides for OSHA standards to preempt State job safety and health rules in areas addressed by Agency standards; in these States, the direct final rule limits State policy options in the same manner as every Agency standard. In States with OSHA-approved State Plans, this action does not significantly limit State policy options.

E. State-Plan States

When Federal OSHA promulgates a new standard or imposes additional or more stringent requirements than an existing standard, the 26 States and U.S. Territories with their own OSHA-approved occupational safety and health plans must revise their standards to reflect the new standard or amendment, or show the Agency why such action is unnecessary, e.g., because an existing State standard covering this area already is at least as effective as the new Federal standard or amendment (29 U.S.C. 553.5(a)). The State standard must be at least as effective as the final Federal rule, must be applicable to both the private and public (i.e., State and local government employees) sectors, and must be completed within six months of the publication date of the final Federal rule. When OSHA promulgates a new standard or amendment that does not impose additional or more stringent requirements than an existing standard, States are not required to revise their standards, although the Agency may encourage them to do so. The 26 States and Territories with OSHA-approved State plans are: Alaska, Arizona, California, Hawaii, Indiana, Iowa, Kentucky, Maryland, Michigan, Minnesota, Nevada, New Mexico, North Carolina, Oregon, Puerto Rico, South Carolina, Tennessee, Utah, Vermont, Virginia, Washington, and Wyoming. Connecticut, New Jersey, New York, and the Virgin Islands have OSHA-approved State plans that apply to State and local government employees only. Although this direct final rule does not impose any additional or more stringent requirements on employers compared to the existing standard, the Agency strongly encourages the States and Territories with their own State Plans that currently do not include the original OSHA ROPS testing standards in their construction and agriculture standards to adopt the revisions promulgated under this direct final rule within six months of the date of this **Federal Register** notice, unless OSHA withdraws the Direct Final Rule following the end of the comment period.

F. Unfunded Mandates Reform Act

OSHA has reviewed this direct final rule according to the Unfunded Mandates Reform Act of 1995 (''UMRA''; 2 U.S.C. 1501 *et seq.*) and Executive Order 12875. As discussed above in section III.B (''Final Economic Analysis and Regulatory Flexibility Certification'') of this preamble, the Agency has determined that this direct final rule imposes no additional costs on any private-or public-sector entity. Accordingly, this direct final rule requires no additional expenditures by either public or private employers.

As noted earlier, the Agency's standards do not apply to State and local governments, except in States that have voluntarily elected to adopt a State plan approved by the Agency. Consequently, this direct final rule does not meet the definition of a ''Federal intergovernmental mandate'' (see Section 421(5) of the UMRA (2 U.S.C. 658(5)). In conclusion, this direct final rule does not mandate that State, local, and tribal governments adopt new, unfunded regulatory obligations.

G. Public Participation

The Agency requests that interested members of the public who submit written comments concerning this direct final rule do so using any of the methods listed above in the section titled **ADDRESSES**. Note, however, that the Agency has defined a significant adverse comment as only those comments that address: (1) The lawfulness of the procedures used to promulgate the 1996 technical amendment as these procedures relate to the ROPs testing provisions; or (2) whether the minor revisions made to the original ROPS standards in this direct final rule are reasonable or appropriate.

OSHA will post all comments received, without revision, to *http://dockets.osha.gov*, including any personal information provided. The Agency cautions commenters about submitting personal information such as social security numbers and birth dates. For access to materials in the docket, including background documents and comments received, go to *http://dockets.osha.gov.* Contact the OSHA Docket Office for information about materials not available through the OSHA webpage, and for assistance in using the webpage to locate docket submissions.

If the Agency receives no significant adverse comment regarding this direct final rule, it will publish a **Federal Register** notice confirming the effective date of this direct final rule. For the purpose of judicial review, OSHA views the date that it confirms the effective date of the direct final rule to be the date of issuance. Additionally, such confirmation may include minor stylistic or technical changes to the regulatory language provided by this notice. If OSHA receives significant adverse comment on this direct final rule, it will withdraw the direct final rule and determine, based on the comments submitted to the record, whether to issue a proposed rule in the future.

List of Subjects

29 CFR Part 1926

Construction industry, Incorporation by reference, Motor vehicle safety, Occupational safety and health.

29 CFR Part 1928

Agriculture, Incorporation by reference, Motor vehicle safety, Occupational safety and health.

Authority and Signature

Jonathan L. Snare, Acting Assistant Secretary of Labor for Occupational Safety and Health, U.S. Department of Labor, 200 Constitution Avenue, NW., Washington, DC 20210 authorized the preparation of this direct final rule. The Agency is issuing this direct final rule under the following authorities: Sections 4, 6, and 8 of the Occupational Safety and Health Act of 1970 (29 U.S.C. 653, 655, 657); Section 3704 of the Contract Work Hours and Safety Standards Act (40 U.S.C. 3701 *et seq.*); Secretary of Labor's Order No. 5–2002 (67 FR 65008); and 29 CFR part 1911.

Signed at Washington, DC on December 13, 2005.

Jonathan L. Snare,

Acting Assistant Secretary of Labor.

IV. Amended Standards

■ Based on the reasons presented in the preamble to this direct final rule, OSHA is amending 29 CFR parts 1926 and 1928 as follows:

PART 1926—[AMENDED]

Subpart W—[Amended]

■ 1. Revise the authority citation for subpart W of part 1926 to read as follows:

Authority: Section 3704 of the Contract Work Hours and Safety Standards Act (40 U.S.C. 3701); Sections 4, 6, and 8 of the Occupational Safety and Health Act of 1970 (29 U.S.C. 653, 655, 657); and Secretary of Labor's Order No. 12–71 (36 FR 8754), 8–76 (41 FR 25059), 9–83 (48 FR 35736), 1–90 (55 FR 9033), 6–96 (62 FR 111), 3–2000 (65 FR 50017), or 5–2002 (67 FR 65008), as applicable.

■ 2. Revise §§ 1926.1002 and 1926.1003 and add a new Appendix A to subpart W, to read as follows:

§ 1926.1002 Protective frames (roll-over protective structures, known as ROPS) for wheel-type agricultural and industrial tractors used in construction.

(a) *General.* (1) The purpose of this section is to set forth requirements for frames used to protect operators of wheel-type agricultural and industrial tractors that will minimize the possibility of operator injury resulting from accidental upsets during normal operation. With respect to agricultural and industrial tractors, the provisions of 29 CFR 1926.1001 and 1926.1003 for rubber-tired dozers and rubber-tired loaders may be used instead of the requirements of this section.

(2) The protective frame that is the subject of this standard is a structure mounted to the tractor that extends above the operator's seat and conforms generally to Figure W–14.

(3) When an overhead weather shield is attached to the protective frame, it may be in place during testing, provided that it does not contribute to the strength of the protective frame. When such an overhead weather shield is attached, it must meet the requirements of paragraph (i) of this section.

(4) For overhead protection requirements, see 29 CFR 1926.1003.

(5) The following provisions address requirements for protective enclosures.

(i) When protective enclosures are used on wheel-type agricultural and industrial tractors, they shall meet the requirements of Society of Automotive Engineers (''SAE'') standard J168–1970 (''Protective enclosures—test procedures and performance requirements''), which is incorporated by reference. The incorporation by reference was approved by the Director of the Federal Register in accordance with 5 U.S.C. 552(a) and 1 CFR part 51.

(ii) SAE standard J168–1970 appears in the 1971 SAE Handbook, or it may be examined at: any OSHA Regional Office; the OSHA Docket Office, U.S. Department of Labor, 200 Constitution Avenue, NW., Room N–2625, Washington, DC 20210 (telephone: (202) 693–2350 (TTY number: (877) 889–5627)); or the National Archives and Records Administration (''NARA''). (For information on the availability of this material at NARA, telephone (202) 741–6030 or access the NARA Web site at *www.archives.gov/federal_register/code_of_federal_regulations/ibr_locations.html.*) Copies may be purchased from the Society of Automotive Engineers, 400 Commonwealth Drive, Warrendale, Pennsylvania 15096–0001.

(b) *Applicability.* The requirements of this section apply to wheel-type agricultural and industrial tractors used in construction work. See paragraph (j) of this section for definitions of agricultural tractors set forth in paragraph (i) of this section.

(c) *Performance requirements.* (1) Either a laboratory test or a field test is required to determine the performance requirements set forth in paragraph (i) of this section.

(2) A laboratory test may be either static or dynamic. The laboratory test must be under conditions of repeatable and controlled loading to permit analysis of the protective frame.

(3) A field-upset test, when used, shall be conducted under reasonably controlled conditions, both rearward and sideways to verify the effectiveness of the protective frame under actual dynamic conditions.

(d) *Test procedures—general.* (1) The tractor used shall be the tractor with the greatest weight on which the protective frame is to be used.

(2) A new protective frame and mounting connections of the same design shall be used for each test procedure.

(3) Instantaneous and permanent frame deformation shall be measured and recorded for each segment of the test.

(4) Dimensions relative to the seat shall be determined with the seat unloaded and adjusted to its highest and most rearward latched position provided for a seated operator.

(5) When the seat is offset, the frame loading shall be on the side with the least space between the centerline of the seat and the upright.

(6) The low-temperature impact strength of the material used in the protective structure shall be verified by suitable material tests or material certifications according to 29 CFR 1926.1001(f)(2)(iv).

(e) *Test procedure for vehicle overturn.* (1) *Vehicle weight.* The weight of the tractor, for purposes of this section, includes the protective frame, all fuels, and other components required for normal use of the tractor. Ballast must be added when necessary to achieve a minimum total weight of 130 lb (59 kg) per maximum power-takeoff horsepower at the rated engine speed. The weight of the front end must be at least 33 lb (15 kg) per maximum power-takeoff horsepower. In case power-takeoff horsepower is unavailable, 95 percent of net engine flywheel horsepower shall be used.

(2) Agricultural tractors shall be tested at the weight set forth in paragraph (e)(1) of this section.

(3) Industrial tractors shall be tested with items of integral or mounted equipment and ballast that are sold as standard equipment or approved by the vehicle manufacturer for use with the vehicle when the protective frame is expected to provide protection for the operator with such equipment installed. The total vehicle weight and front-end weight as tested shall not be less than the weights established in paragraph (e)(1) of this section.

(4) The following provisions address soil bank test conditions.

(i) The test shall be conducted on a dry, firm soil bank as illustrated in Figure W–15. The soil in the impact area shall have an average cone index in the 0-in. to 6-in. (0-mm to 153-mm) layer not less than 150 according to American Society of Agricultural Engineers (''ASAE'') recommendation ASAE R313.1–1971 (''Soil cone

penetrometer''), as reconfirmed in 1975, which is incorporated by reference. The incorporation by reference was approved by the Director of the Federal Register in accordance with 5 U.S.C. 552(a) and 1 CFR part 51. The path of vehicle travel shall be 12° ± 2° to the top edge of the bank.

(ii) ASAE recommendation ASAE R313.1–1971, as reconfirmed in 1975, appears in the 1977 Agricultural Engineers Yearbook, or it may be examined at: any OSHA Regional Office; the OSHA Docket Office, U.S. Department of Labor, 200 Constitution Avenue, NW., Room N–2625, Washington, DC 20210 (telephone: (202) 693–2350 (TTY number: (877) 889–5627)); or the National Archives and Records Administration (''NARA''). (For information on the availability of this material at NARA, telephone (202) 741–6030 or access the NARA Web site at *www.archives.gov/federal_register/code_of_federal_regulations/ibr_locations.html*). Copies may be purchased from the American Society of Agricultural Engineers 2950 Niles Road, St. Joseph, MI 49085.

(5) The upper edge of the bank shall be equipped with an 18-in. (457-mm) high ramp as described in Figure W–15 to assist in tipping the vehicle.

(6) The front and rear wheel-tread settings, when adjustable, shall be at the position nearest to halfway between the minimum and maximum settings obtainable on the vehicle. When only two settings are obtainable, the minimum setting shall be used.

(7) *Vehicle overturn test—sideways and rearward.* (i) The tractor shall be driven under its own power along the specified path of travel at a minimum speed of 10 mph (16 kph), or maximum vehicle speed when under 10 mph (16 kph), up the ramp as described in paragraph (d)(5) of this section to induce sideways overturn.

(ii) Rear upset shall be induced by engine power with the tractor operating in gear to obtain 3 to 5 mph (4.8 to 8 kph) at maximum governed engine rpm, preferably by driving forward directly up a minimum slope of two vertical to one horizontal. The engine clutch may be used to aid in inducing the upset.

(f) *Other test procedures.* When the field-upset test is not used to determine ROPS performance, either the static test or the dynamic test, contained in paragraph (g) or (h) of this section, shall be made.

(g) *Static test.* (1) *Test conditions.* (i) The laboratory mounting base shall include that part of the tractor chassis to which the protective frame is attached, including the mounting parts.

(ii) The protective frame shall be instrumented with the necessary equipment to obtain the required load-deflection data at the locations and directions specified in Figures W–16, W–17, and W–18.

(iii) The protective frame and mounting connections shall be instrumented with the necessary recording equipment to obtain the required load-deflection data to be used in calculating *FSB* (see paragraph (j)(3) of this section). The gauges shall be placed on mounting connections before the installation load is applied.

(2) *Test procedure.* (i) The side-load application shall be at the upper extremity of the frame upright at a 90° angle to the centerline of the vehicle. The side load *L* shall be applied according to Figure W–16. *L* and *D* shall be recorded simultaneously. The test shall be stopped when:

(A) The strain energy absorbed by the frame is equal to the required input energy (E_{is});

(B) Deflection of the frame exceeds the allowable deflection; or

(C) The frame load limit occurs before the allowable deflection is reached in the side load.

(ii) The *L–D* diagram (see Figure W–19 for an example) shall be constructed using the data obtained according to paragraph (g)(2)(i) of this section.

(iii) The modified L_m–D_m diagram shall be constructed according to paragraph (g)(2)(ii) and Figure W–20 of this section. The strain energy absorbed by the frame (E_u) shall then be determined.

(iv) E_{is}, *FER*, and *FSB* shall be calculated.

(v) The test procedure shall be repeated on the same frame using *L* (rear input; see Figure W–18) and E_{ir}. Rear-load application shall be distributed uniformly along a maximum projected dimension of 27 in. (686 mm) and a maximum area of 160 sq. in. (1,032 sq. cm) normal to the direction of load application. The load shall be applied to the upper extremity of the frame at the point that is midway between the centerline of the seat and the inside of the frame upright.

(h) *Dynamic test.* (1) *Test conditions.* (i) The protective frame and tractor shall meet the requirements of paragraphs (e)(2) or (3) of this section, as appropriate.

(ii) The dynamic loading shall be produced by using a 4,410-lb (2,000-kg) weight acting as a pendulum. The impact face of the weight shall be 27 ± 1 in. by 27 ± 1 in. (686 ± 25 mm by 686 ± 25 mm), and shall be constructed so that its center of gravity is within 1.0 in. (25.4 mm) of its geometric center. The weight shall be suspended from a pivot point 18 to 22 ft (5.5 to 6.7 m) above the point of impact on the frame, and shall be conveniently and safely adjustable for height (see Figure W–21).

(iii) For each phase of testing, the tractor shall be restrained from moving when the dynamic load is applied. The restraining members shall be 0.50- to 0.63-in. (12.5- to 16.0-mm) steel cable, and points for attaching restraining members shall be located an appropriate distance behind the rear axle and in front of the front axle to provide a 15° to 30° angle between the restraining cable and the horizontal. The restraining cables shall either be in the plane in which the center of gravity of the pendulum will swing, or more than one restraining cable shall give a resultant force in this plane (see Figure W–22).

(iv) The wheel-tread setting shall comply with the requirements of paragraph (e)(6) of this section. The tires shall have no liquid ballast, and shall be inflated to the maximum operating pressure recommended by the tire manufacturer. With the specified tire inflation, the restraining cables shall be tightened to provide tire deflection of 6 to 8 percent of the nominal tire-section width. After the vehicle is restrained properly, a wooden beam that is 6-in. × 6-in. (150 mm × 150 mm) shall be driven tightly against the appropriate wheels and clamped. For the test to the side, an additional wooden beam shall be placed as a prop against the wheel nearest to the operator's station, and shall be secured to the floor so that when it is positioned against the wheel rim, it is at an angle of 25° to 40° to the horizontal. It shall have a length 20 to 25 times its depth, and a width two to three times its depth (see Figures W–22 and W–23).

(v) Means shall be provided for indicating the maximum instantaneous deflection along the line f impact. A simple friction device is illustrated in Figure W–23.

(vi) No repair or adjustments may be carried out during the test.

(vii) When any cables, props, or blocking shift or break during the test, the test shall be repeated.

(2) *Test procedure.* (i) *General.* The frame shall be evaluated by imposing dynamic loading to the rear, followed by a load to the side on the same frame. The pendulum dropped from the height (see the definition of ''*H*'' in paragraph (j)(3) of this section) imposes the dynamic load. The position of the pendulum shall be so selected that the initial point of impact on the frame shall be in line with the arc of travel of the center of gravity of the pendulum. A quick-release mechanism should be

used but, when used, it shall not influence the attitude of the block.

(ii) *Impact at rear.* The tractor shall be restrained properly according to paragraphs (h)(1)(iii) and (h)(1)(iv) of this section. The tractor shall be positioned with respect to the pivot point of the pendulum so that the pendulum is 20° from the vertical prior to impact as shown in Figure W–22. The impact shall be applied to the upper extremity of the frame at the point that is midway between the centerline of the frame and the inside of the frame upright of a new frame.

(iii) *Impact at side.* The blocking and restraining shall conform to paragraphs (h)(1)(iii) and (h)(1)(iv) of this section. The center point of impact shall be that structural member of the protective frame likely to hit the ground first in a sideways accidental upset. The side impact shall be applied to the side opposite that used for rear impact.

(i) *Performance requirements.* (1) *General.* (i) The frame, overhead weather shield, fenders, or other parts in the operator area may be deformed in these tests, but shall not shatter or leave sharp edges exposed to the operator, or violate the dimensions shown in Figures W–16 and W–17, and specified as follows:

D = 2 in. (51 mm) inside of the frame upright to the vertical centerline of the seat;
E = 30 in. (762 mm);
F = Not less than 0 in. (0 mm) and not more than 12 in. (305 mm), measured at the centerline of the seat backrest to the crossbar along the line of load application as shown in Figure W–17; and
G = 24 in. (610 mm).

(ii) The material and design combination used in the protective structure must be such that the structure can meet all prescribed performance tests at 0 °F (−18 °C) according to 29 CFR 1926.1001(f)(2)(iv).

(2) *Vehicle overturn performance requirements.* The requirements of this paragraph (i) must be met in both side and rear overturns.

(3) *Static test performance requirements.* Design factors shall be incorporated in each design to withstand an overturn test as specified by this paragraph (i). The structural requirements will be met generally when *FER* is greater than 1.0 and *FSB* is greater than *K*–1 in both side and rear loadings.

(4) *Dynamic test performance requirements.* Design factors shall be incorporated in each design to withstand the overturn test specified by this paragraph (i). The structural requirements will be met generally when the dimensions in this paragraph (i) are used during both side and rear loads.

(j) *Definitions applicable to this section.* (1) ''Agricultural tractor'' means a wheel-type vehicle of more than 20 engine horsepower, used in construction work, that is designed to furnish the power to pull, propel, or drive implements. (SAE standard J333a–1970 (''Operator protection for wheel-type agricultural and industrial tractors'') defines ''agricultural tractor'' as a ''wheel-type vehicle of more than 20 engine horsepower designed to furnish the power to pull, carry, propel, or drive implements that are designed for agricultural usage.'' Since this part 1926 applies only to construction work, the SAE definition of ''agricultural tractor'' is adopted for purposes of this subpart.)

(2) ''Industrial tractor'' means that class of wheel-type tractors of more than 20 engine horsepower (other than rubber-tired loaders and dozers described in 29 CFR 1926.1001), used in operations such as landscaping, construction services, loading, digging, grounds keeping, and highway maintenance.

(3) The following symbols, terms, and explanations apply to this section:

E_{is} = Energy input to be absorbed during side loading in ft-lb (E'_{is} in J [joules]);
$E_{is} = 723 + 0.4\ W$ ft-lb ($E'_{is} = 100 + 0.12\ W'$, J);
E_{ir} = Energy input to be absorbed during rear loading in ft-lb (E'_{ir} in J);
$E_{ir} = 0.47\ W$ ft-lb ($E'_{ir} = 0.14\ W'$, J);
W = Tractor weight as specified by 29 CFR 1926.1002(e)(1) and (e)(3), in lb (W', kg);
L = Static load, lb (kg);
D = Deflection under L, in. (mm);
L–D = Static load-deflection diagram;
L_m–D_m = Modified static load-deflection diagram (Figure W–20). To account for an increase in strength due to an increase in strain rate, raise L in the plastic range $L \times K$;
K = Increase in yield strength induced by higher rate of loading (1.3 for hot, rolled, low-carbon steel 1010–1030). Low carbon is preferable; however, when higher carbon or other material is used, K must be determined in the laboratory. Refer to Norris, C.H., Hansen, R.J., Holley, M.J., Biggs, J.M., Namyet, S., and Minami, J.V., *Structural Design for Dynamic Loads*, McGraw-Hill, New York, 1959, p. 3;
L_{max} = Maximum observed static load;
Load Limit = Point on a continuous L–D curve at which the observed static load is 0.8 L_{max} (refer to Figure W–19);
E_u = Strain energy absorbed by the frame, ft-lb (J); area under the L_m–D_m curve;
FER = Factor of energy ratio, $FER = E_u E_{is}$; also, $FER = E_u E_{ir}$;
P_b = Maximum observed force in mounting connection under a static load, L, lb (kg);
P_u = Ultimate force capacity of mounting connection, lb (kg);
FSB = Design margin for a mounting connection $(P_u P_b) - 1$; and
H = Vertical height of lift of 4,410-lb (2,000-kg) weight, in. (H', mm). The weight shall be pulled back so that the height of its center of gravity above the point of impact is defined as follows: $H = 4.92 + 0.00190\ W$ ($H' = 125 + 0.107\ W'$) (see Figure W–24).

(k) *Source of standard.* The standard in this section is derived from, and restates, in part, Society of Automotive Engineers (''SAE'') standard J334a-1970 (''Protective frame test procedures and performance requirements''). The SAE standard appears in the 1971 SAE Handbook, which may be examined at any OSHA regional office.

§ 1926.1003 Overhead protection for operators of agricultural and industrial tractors used in construction.

(a) *General.* (1) *Purpose.* When overhead protection is provided on wheel-type agricultural and industrial tractors, the overhead protection shall be designed and installed according to the requirements contained in this section. The provisions of 29 CFR 1926.1001 for rubber-tired dozers and rubber-tired loaders may be used instead of the standards contained in this section. The purpose of this standard is to minimize the possibility of operator injury resulting from overhead hazards such as flying and falling objects, and at the same time to minimize the possibility of operator injury from the cover itself in the event of accidental upset.

(2) *Applicability.* This standard applies to wheel-type agricultural and industrial tractors used in construction work (see 29 CFR 1926.1002(b) and (j)). In the case of machines to which 29 CFR 1926.604 (relating to site clearing) also applies, the overhead protection may be either the type of protection provided in 29 CFR 1926.604, or the type of protection provided by this section.

(b) *Overhead protection.* When overhead protection is installed on wheel-type agricultural or industrial tractors used in construction work, it shall meet the requirements of this paragraph. The overhead protection may be constructed of a solid material. When grid or mesh is used, the largest permissible opening shall be such that

the maximum circle that can be inscribed between the elements of the grid or mesh is 1.5 in. (38 mm) in diameter. The overhead protection shall not be installed in such a way as to become a hazard in the case of upset.

(c) *Test procedures—general.* (1) The requirements of 29 CFR 1926.1002(d), (e), and (f) shall be met.

(2) Static and dynamic rear load application shall be distributed uniformly along a maximum projected dimension of 27 in. (686 mm), and a maximum area of 160 sq. in. (1,032 sq. cm), normal to the direction of load application. The load shall be applied to the upper extremity of the frame at the point that is midway between the centerline of the seat and the inside of the frame upright.

(3) The static and dynamic side load application shall be distributed uniformly along a maximum projected dimension of 27 in. (686 mm), and a maximum area of 160 sq. in. (1,032 sq. cm), normal to the direction of load application. The direction of load application is the same as in 29 CFR 1926.1002 (g) and (h). To simulate the characteristics of the structure during an upset, the center of load application may be located from a point 24 in. (610 mm) (*K*) forward to 12 in. (305 mm) (*L*) rearward of the front of the seat backrest, to best use the structural strength (see Figure W–25).

(d) *Drop test procedures.* (1) The same frame shall be subjected to the drop test following either the static or dynamic test.

(2) A solid steel sphere or material of equivalent spherical dimension weighing 100 lb (45.4 kg) shall be dropped once from a height 10 ft (3.08 m) above the overhead cover.

(3) The point of impact shall be on the overhead cover at a point within the zone of protection as shown in Figure W–26, which is furthest removed from major structural members.

(e) *Crush test procedure.* (1) The same frame shall be subjected to the crush test following the drop test and static or dynamic test.

(2) The test load shall be applied as shown in Figure W–27, with the seat positioned as specified in 29 CFR 1926.1002(d)(4). Loading cylinders shall be mounted pivotally at both ends. Loads applied by each cylinder shall be equal within two percent, and the sum of the loads of the two cylinders shall be two times the tractor weight as set forth in 29 CFR 1926.1002(e)(1). The maximum width of the beam illustrated in Figure W–27 shall be 6 in. (152 mm).

(f) *Performance requirements.* (1) *General.* The performance requirements set forth in 29 CFR 1926.1002(i)(2), (3), and (4) shall be met.

(2) *Drop test performance requirements.* (i) Instantaneous deformation due to impact of the sphere shall not enter the protected zone as illustrated in Figures W–25, W–26, and W–28.

(ii) In addition to the dimensions set forth in 29 CFR 1926.1002(i)(1)(i), the following dimensions apply to Figure W–28:

H = 17.5 in. (444 mm); and

J = 2 in. (50.8 mm), measured from the outer periphery of the steering wheel.

(3) *Crush test performance requirements.* The protected zone as described in Figure W–28 must not be violated.

(g) *Source of standard.* This standard is derived from, and restates, in part, the portions of Society of Automotive Engineers (''SAE'') standard J167–1970 (''Protective frame with overhead protection—test procedures and performance requirements''), which pertain to overhead protection requirements. The SAE standard appears in the 1971 SAE Handbook, which may be examined at any OSHA regional office.

Appendix A to Subpart W—Figures W–14 through W–28

BILLING CODE 4510–26–P

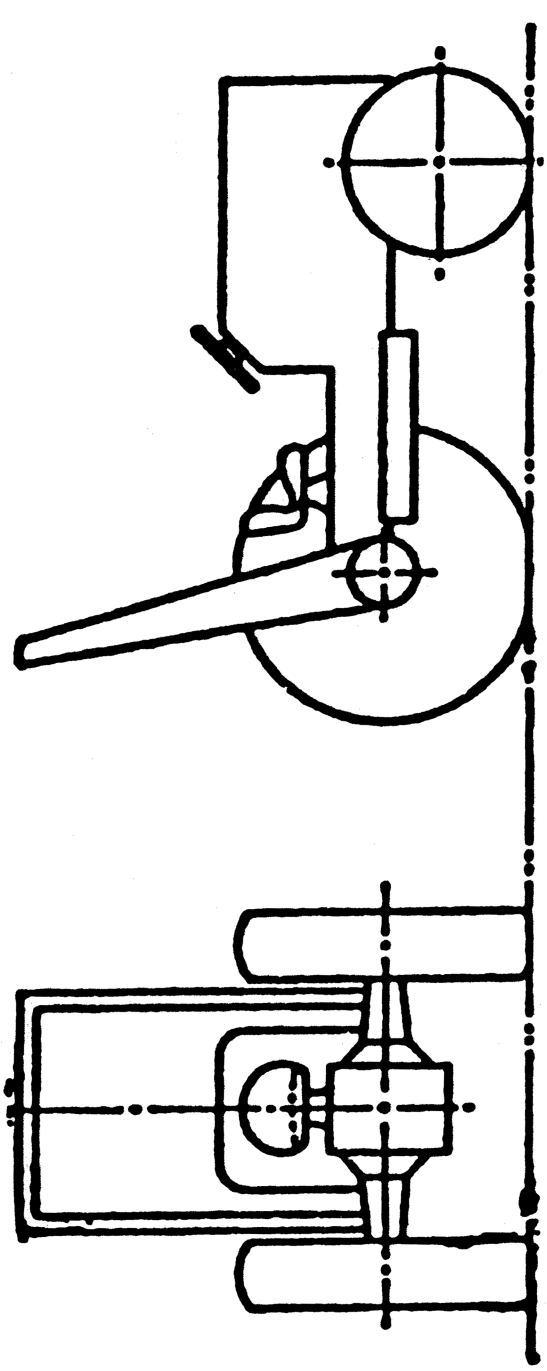

FIGURE W-14—Typical frame configuration.

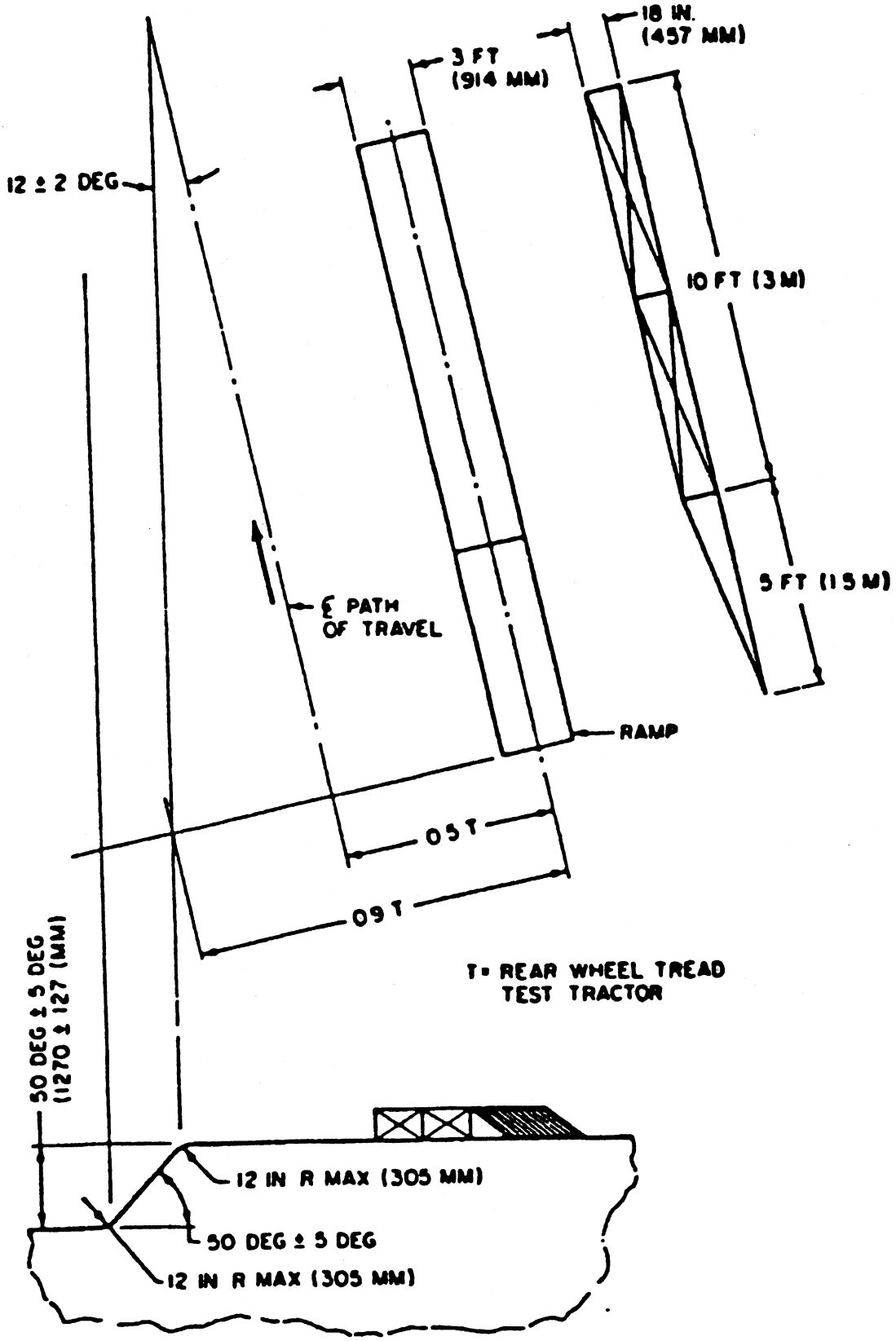
18 IN.
(457 MM)
3 FT
(914 MM)
12 ± 2 DEG
10 FT (3 M)
5 FT (1.5 M)
℄ PATH
OF TRAVEL
RAMP
0.5 T
0.9 T
T = REAR WHEEL TREAD
TEST TRACTOR
50 DEG ± 5 DEG
(1270 ± 127 (MM)
12 IN R MAX (305 MM)
50 DEG ± 5 DEG
12 IN R MAX (305 MM)

FIGURE W–15.

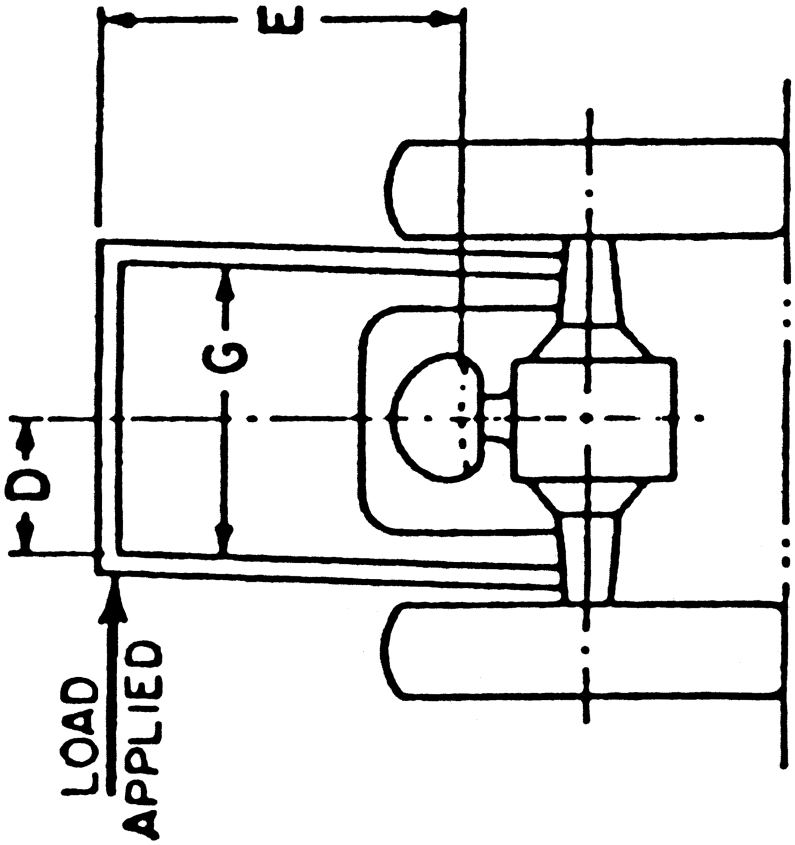

FIGURE W-16—Side load application.

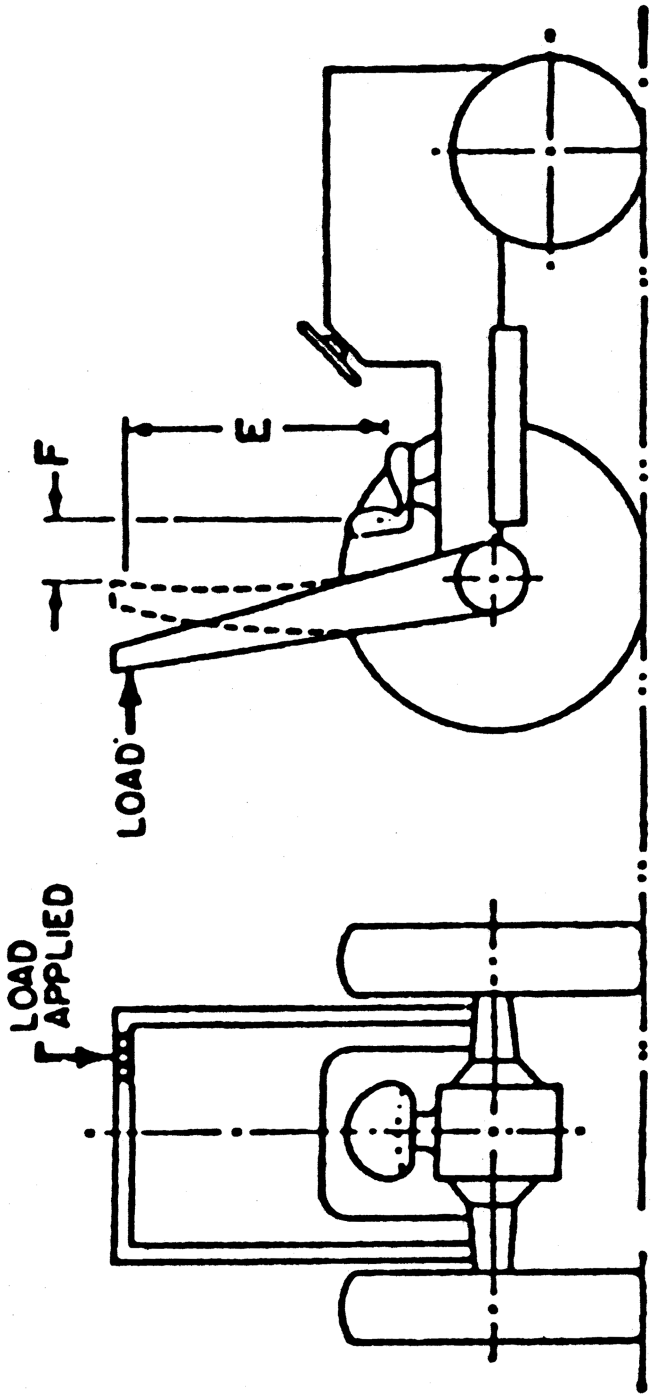

FIGURE W-17—Rear load application.

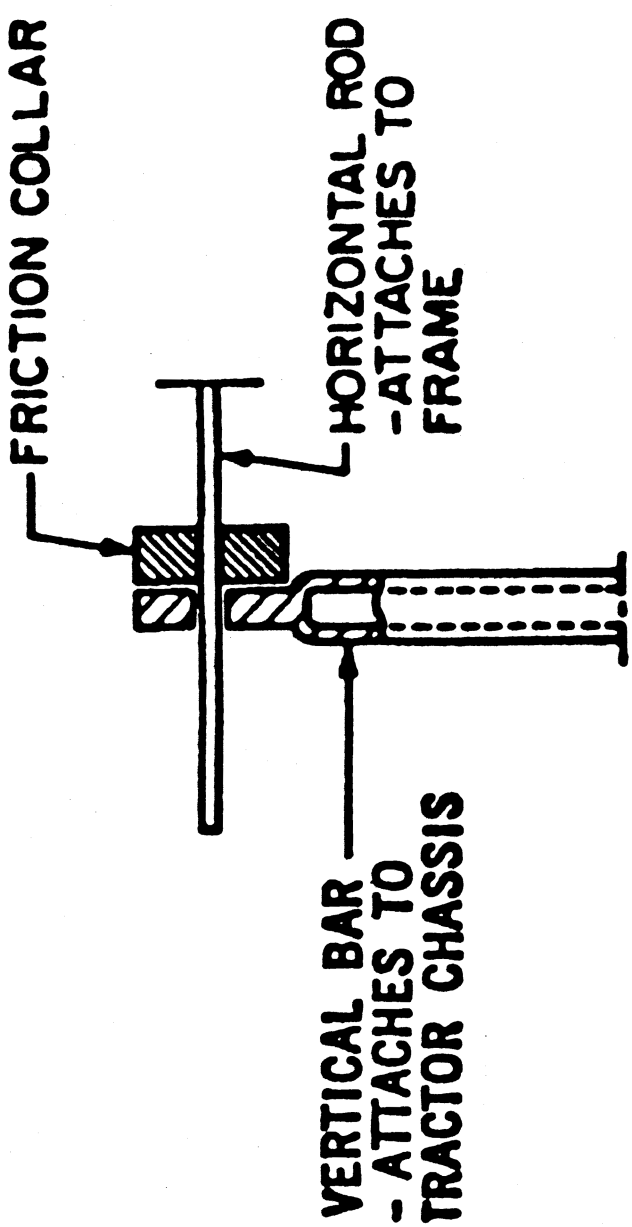

FIGURE W-18—Method of measuring instantaneous deflection.

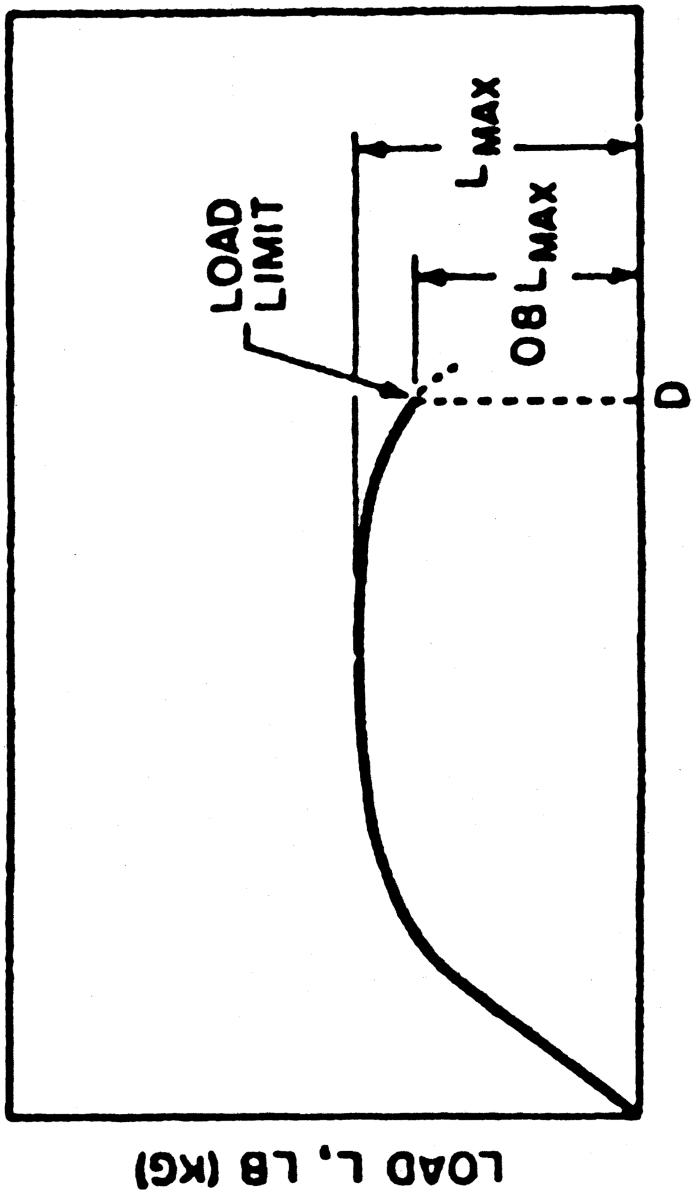

FIGURE W–18—Typical L–D diagram

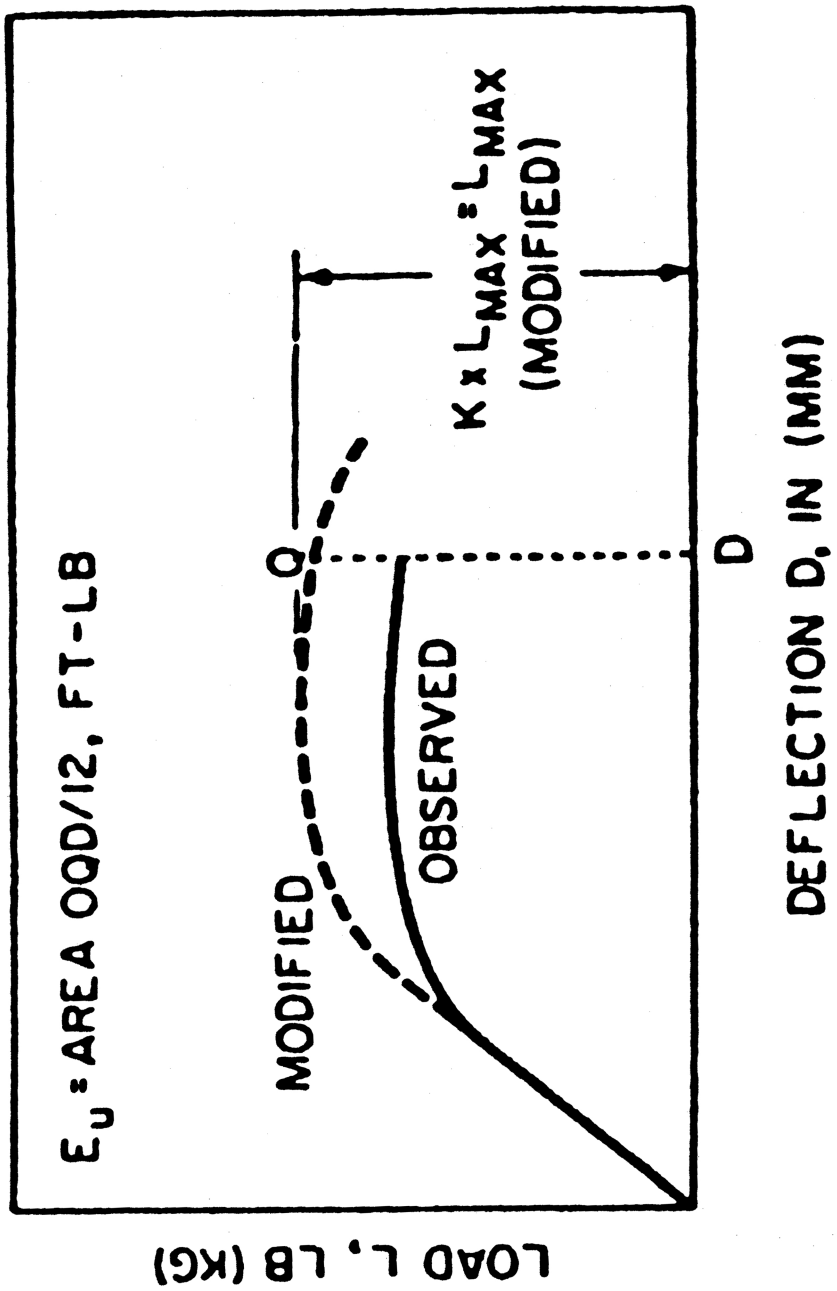

FIGURE W–20—Typical modified L_m–D diagram.

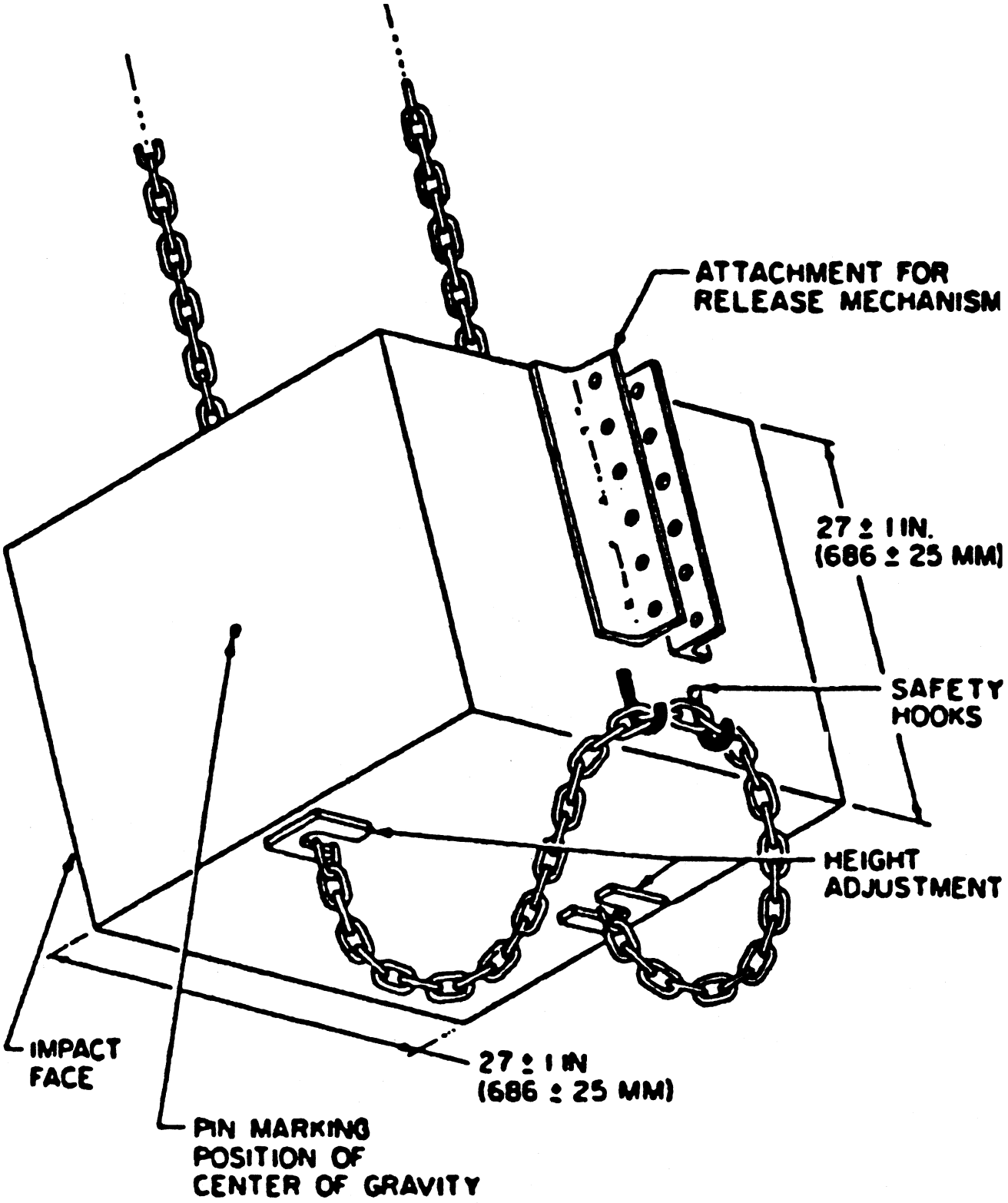

FIGURE W–21—Pendulum.

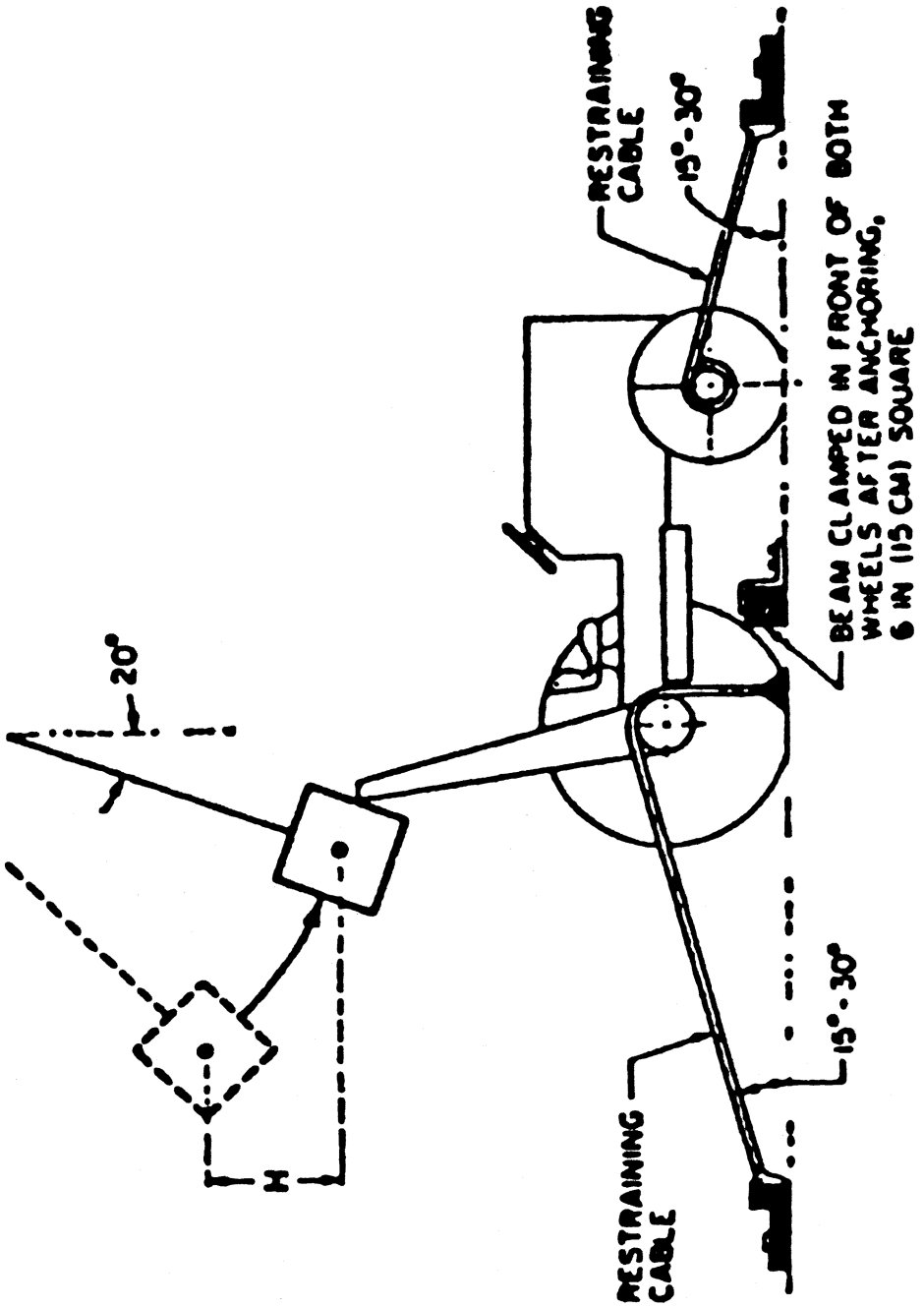

FIGURE W-22—Method of Impact from rear

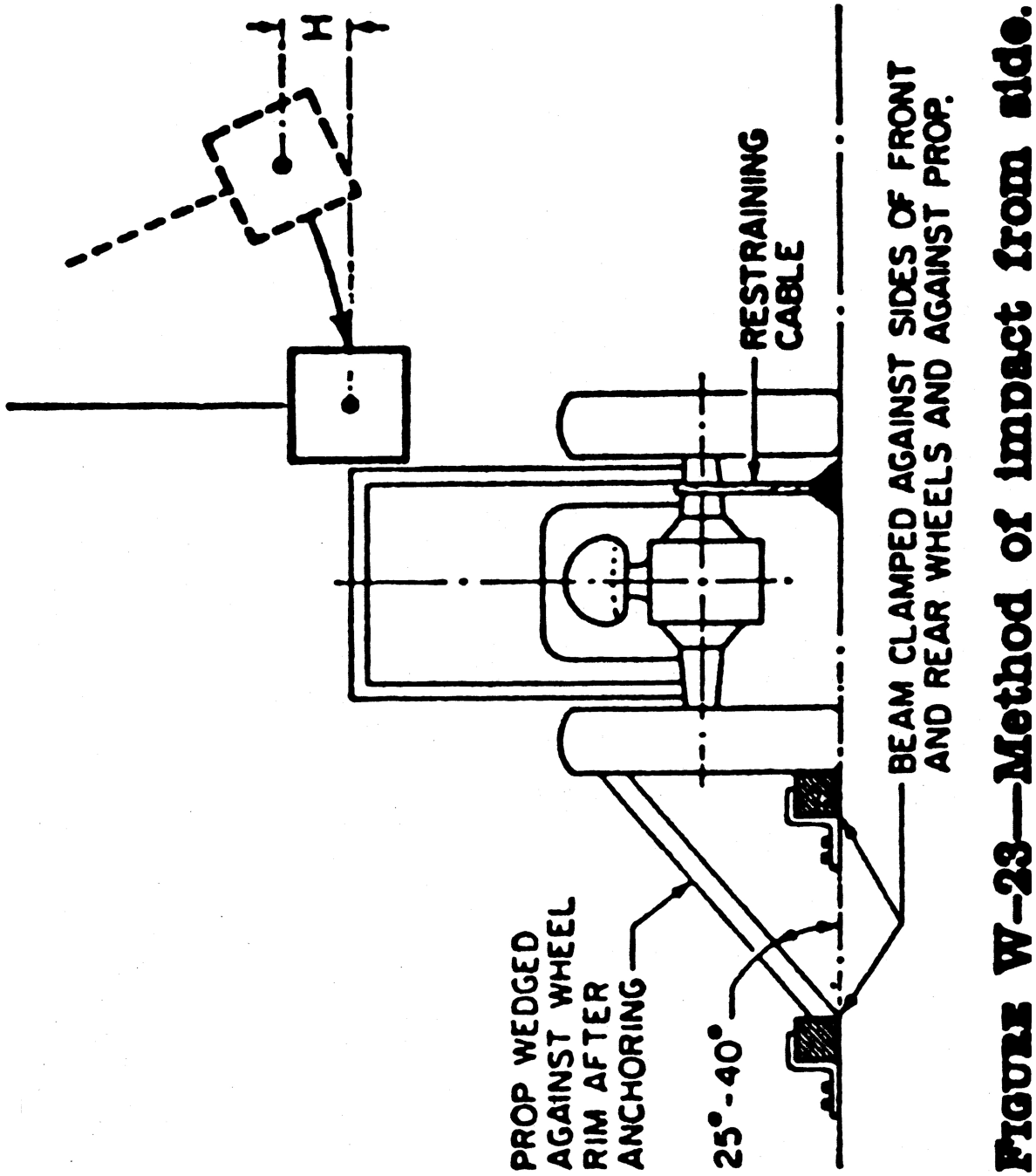

FIGURE W-23—Method of impact from side.

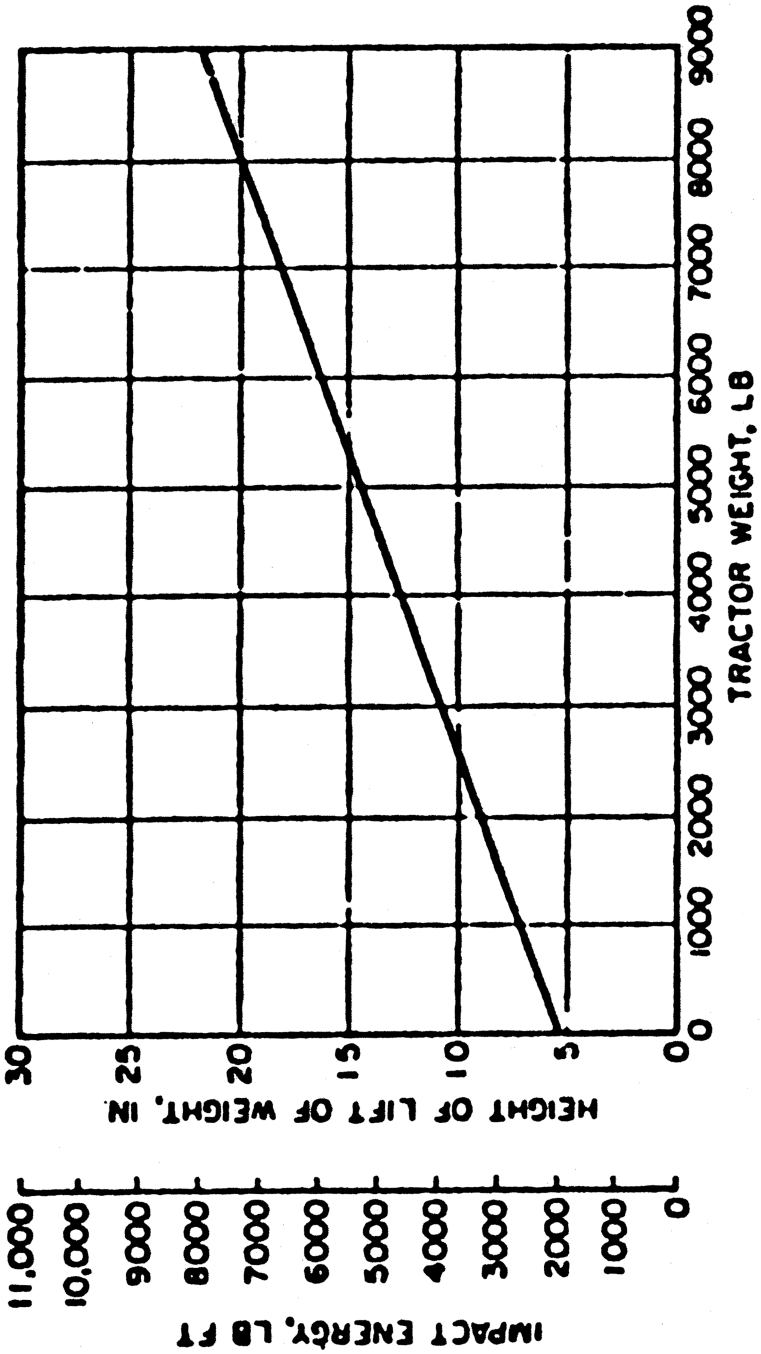

NOTATION OF FORMULAE

H = 4.92 + .00019 W OR (H' = .125 + 0.107 W')

W = TRACTOR WEIGHT AS DEFINED IN PARAGRAPH 3.3 IN POUNDS (W' IN KG)

FIGURE W–24—Impact energy and corresponding lift height of 4,410 lb. (2,000 kg.) weight.

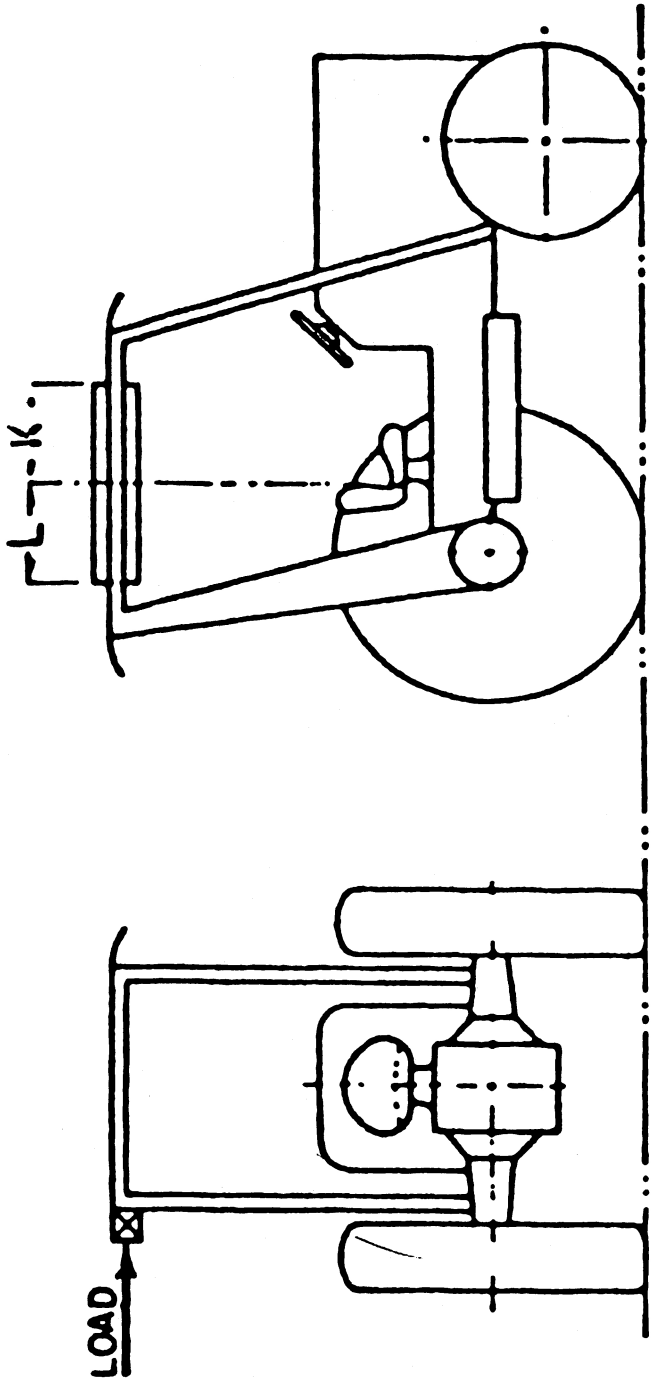

FIGURE W–25—Location for side load.

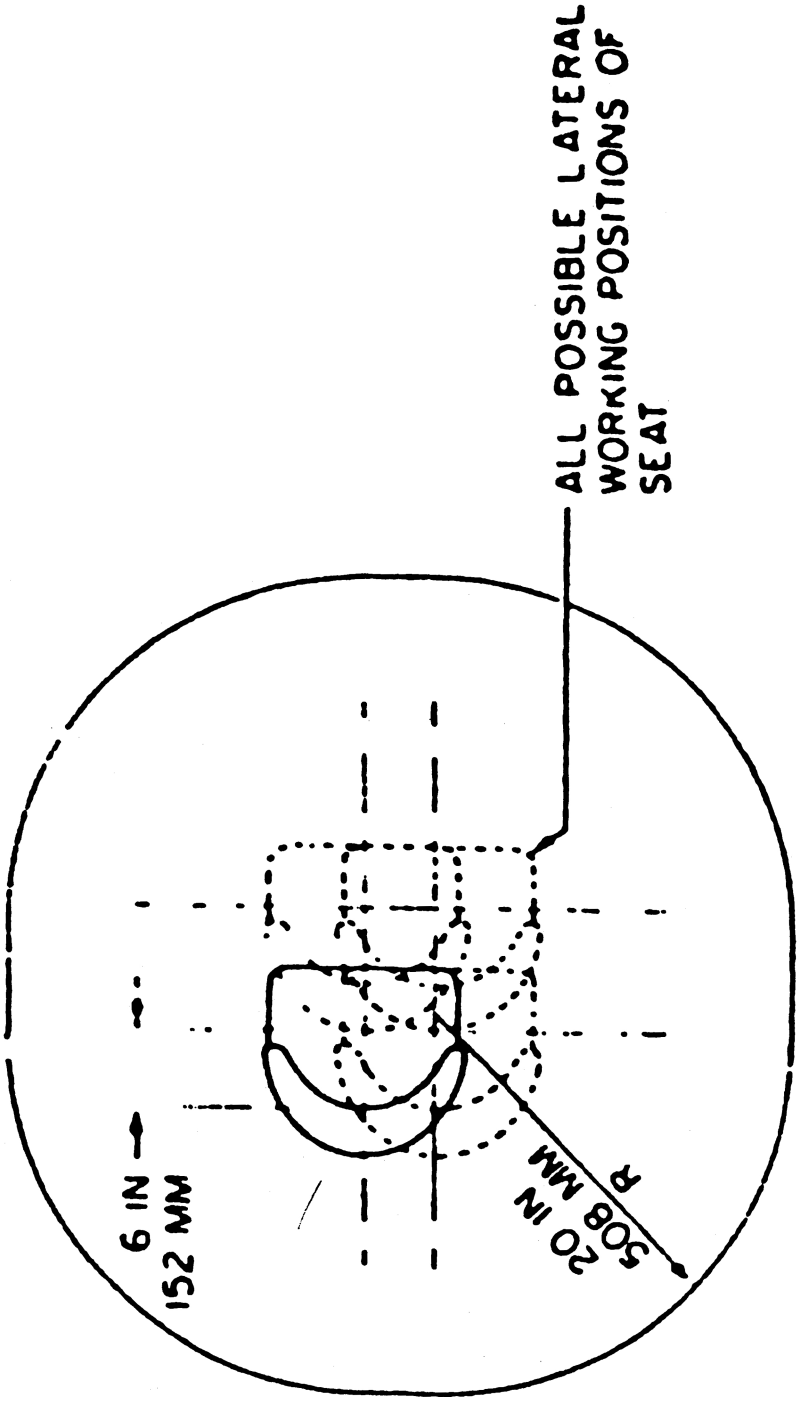

FIGURE W–26—Zone of protection for drop test.

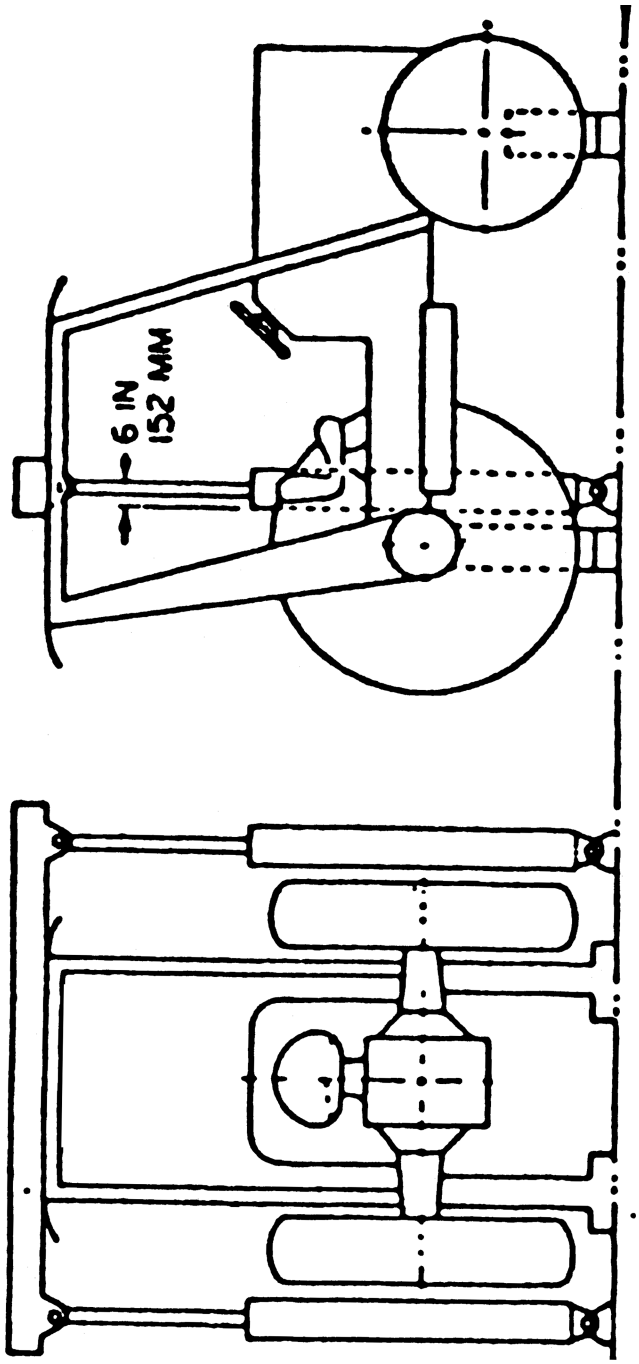

FIGURE W–27—Method of load application for crush test.

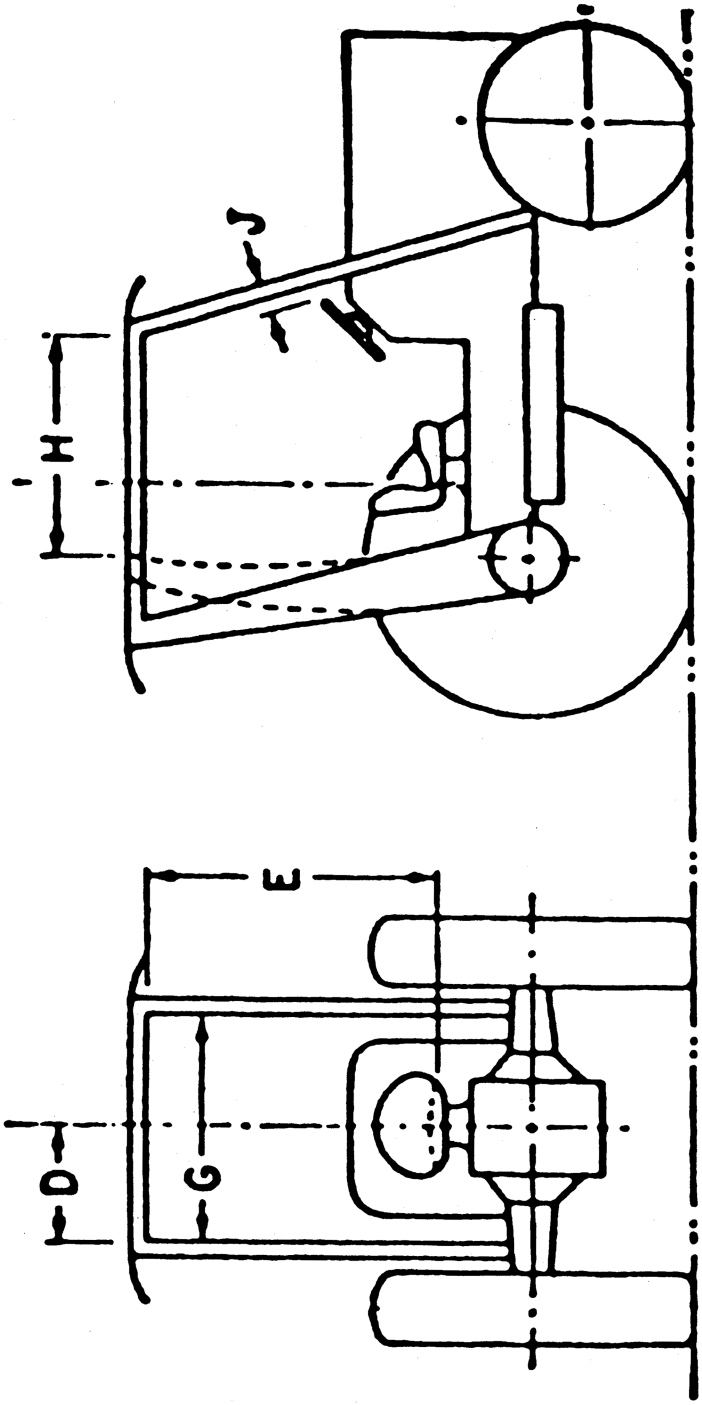

FIGURE W–28—Protected zone during crush and drop tests.

BILLING CODE 4510–26–C

PART 1928—[AMENDED]

Subpart C—[Amended]

■ 3. Revise the authority citation to part 1928 to read as follows:

Authority: Sections 4, 6, and 8 of the Occupational Safety and Health Act of 1970 (29 U.S.C. 653, 655, 657); and Secretary of Labor's Order No. 12–71 (36 FR 8754), 8–76 (41 FR 25059), 9–83 (48 FR 35736), 1–90 (55 FR 9033), 6–96 (62 FR 111), 3–2000 (65 FR 50017) or 5–2002 (67 FR 65008) as applicable; and 29 CFR part 1911.

Section 1928.21 also issued under section 29, Hazardous Materials Transportation Uniform Safety Act of 1990 (Pub. L. 101–615, 104 Stat. 3244 (49 U.S.C. 1801–1819 and 5 U.S.C. 553)).

■ 4. Revise paragraph (b)(1) of § 1928.51 to read as follows:

§ 1928.51 Roll-over protective structures (ROPS) for tractors used in agricultural operations.

* * * * *

(b) * * *

(1) *Roll-over protective structures (ROPS).* ROPS shall be provided by the employer for each tractor operated by an employee. Except as provided in paragraph (b)(5) of this section, a ROPS used on wheel-type tractors shall meet the test and performance requirements of 29 CFR 1928.52, 1928.53, or 1926.1002 as appropriate. A ROPS used on track-type tractors shall meet the test

and performance requirements of 29 CFR 1926.1001.

* * * * *

■ 5. Add §§ 1928.52, 1928.53, and a new Appendix B to subpart C to read as follows:

§ 1928.52 Protective frames for wheel-type agricultural tractors—test procedures and performance requirements.

(a) *Purpose.* The purpose of this section is to establish the test and performance requirements for a protective frame designed for wheel-type agricultural tractors to minimize the frequency and severity of operator injury resulting from accidental upsets. General requirements for the protection of operators are specified in 29 CFR 1928.51.

(b) *Types of tests.* All protective frames for wheel-type agricultural tractors shall be of a model that has been tested as follows:

(1) *Laboratory test.* A laboratory energy-absorption test, either static or dynamic, under repeatable and controlled loading, to permit analysis of the protective frame for compliance with the performance requirements of this standard.

(2) *Field-upset test.* A field-upset test under controlled conditions, both to the side and rear, to verify the effectiveness of the protective system under actual dynamic conditions. Such testing may be omitted when:

(i) The analysis of the protective-frame static-energy absorption test results indicates that both FER_{is} and FER_{ir} (as defined in paragraph (d)(2)(ii) of this section) exceed 1.15; or

(ii) The analysis of the protective-frame dynamic-energy absorption test results indicates that the frame can withstand an impact of 15 percent greater than the impact it is required to withstand for the tractor weight as shown in Figure C–7.

(c) *Descriptions.* (1) *Protective frame.* A protective frame is a structure comprised of uprights mounted to the tractor, extending above the operator's seat. A typical two-post frame is shown in Figure C–1.

(2) *Overhead weather shield.* When an overhead weather shield is available for attachment to the protective frame, it may be in place during tests provided it does not contribute to the strength of the protective frame.

(3) *Overhead falling object protection.* When an overhead falling-object protection device is available for attachment to the protective frame, it may be in place during tests provided it does not contribute to the strength of the protective frame.

(d) *Test procedures.* (1) *General.* (i) The tractor weight used shall be that of the heaviest tractor model on which the protective frame is to be used.

(ii) Each test required under this section shall be performed on a new protective frame. Mounting connections of the same design shall be used during each such test.

(iii) Instantaneous deflection shall be measured and recorded for each segment of the test; see paragraph (e)(1)(i) of this section for permissible deflections.

(iv) The seat-reference point (''*SRP*'') in Figure C–3 is that point where the vertical line that is tangent to the most forward point at the longitudinal seat centerline of the seat back, and the horizontal line that is tangent to the highest point of the seat cushion, intersect in the longitudinal seat section. The seat-reference point shall be determined with the seat unloaded and adjusted to the highest and most rearward position provided for seated operation of the tractor.

(v) When the centerline of the seat is off the longitudinal center, the frame loading shall be on the side with the least space between the centerline of seat and the protective frame.

(vi) Low-temperature characteristics of the protective frame or its material shall be demonstrated as specified in paragraph (e)(1)(ii) of this section.

(vii) Rear input energy tests (static, dynamic, or field-upset) need not be performed on frames mounted to tractors having four driven wheels and more than one-half their unballasted weight on the front wheels.

(viii) Accuracy table:

Measurements	Accuracy
Deflection of the frame, in. (mm)	±5 percent of the deflection measured.
Vertical weight, lb (kg)	±5 percent of the weight measured.
Force applied to the frame, pounds force (newtons)	±5 percent of the force measured.
Dimensions of the critical zone, in. (mm)	±0.5 in. (12.5 mm).

(2) *Static test procedure.* (i) The following test conditions shall be met:

(A) The laboratory mounting base shall be the tractor chassis for which the protective frame is designed, or its equivalent;

(B) The protective frame shall be instrumented with the necessary equipment to obtain the required load-deflection data at the locations and directions specified in Figures C–2 and C–3; and

(C) When the protective frame is of a one- or two-upright design, mounting connections shall be instrumented with the necessary equipment to record the required force to be used in paragraph (d)(2)(iii)(E) and (J) of this section. Instrumentation shall be placed on mounting connections before installation load is applied.

(ii) The following definitions shall apply:

W = Tractor weight (see 29 CFR 1928.51(a)) in lb (W' in kg);

E_{is} = Energy input to be absorbed during side loading in ft-lb (E'_{is} in J [joules]);

$E_{is} = 723 + 0.4\ W$ ($E'_{is} = 100 + 0.12\ W'$);

E_{ir} = Energy input to be absorbed during rear loading in ft-lb (E'_{ir} in J);

$E_{ir} = 0.47\ W$ ($E'_{ir} = 0.14\ W'$);

L = Static load, lbf [pounds force], (N) [newtons];

D = Deflection under L, in. (mm);

L–D = Static load-deflection diagram;

L_{max} = Maximum observed static load;

Load Limit = Point on a continuous L–D curve where the observed static load is 0.8 L_{max} on the down slope of the curve (see Figure C–5);

E_u = Strain energy absorbed by the frame in ft-lb (J); area under the L–D curve;

FER = Factor of energy ratio;

$FER_{is} = E_u E_{is}$;

$FER_{ir} = E_u E_{ir}$;

P_b = Maximum observed force in mounting connection under a static load, L lbf (N);

P_u = Ultimate force capacity of a mounting connection, lbf (N);

FSB = Design margin for a mounting connection; and

$FSB = P_u/P_b$

(iii) The test procedures shall be as follows:

(A) Apply the rear load according to Figure C–3, and record L and D simultaneously. Rear-load application shall be distributed uniformly on the frame over an area perpendicular to the direction of load application, no greater than 160 sq. in. (1,032 sq. cm) in size, with the largest dimension no greater than 27 in. (686 mm). The load shall be applied to the upper extremity of the frame at the point that is midway between the center of the frame and the

inside of the frame upright. When no structural cross member exists at the rear of the frame, a substitute test beam that does not add strength to the frame may be used to complete this test procedure. The test shall be stopped when:

(1) The strain energy absorbed by the frame is equal to or greater than the required input energy E_{ir}; or

(2) Deflection of the frame exceeds the allowable deflection (see paragraph (e)(1)(i) of this section); or

(3) Frame load limit occurs before the allowable deflection is reached in rear load (see Figure C–5).

(B) Using data obtained under paragraph (d)(2)(iii)(A) of this section, construct the *L–D* diagram shown in Figure C–5;

(C) Calculate E_{ir};

(D) Calculate FER_{ir};

(E) Calculate *FSB* as required by paragraph (d)(2)(i)(C) of this section;

(F) Apply the side-load tests on the same frame, and record *L* and *D* simultaneously. Side-load application shall be at the upper extremity of the frame at a 90° angle to the centerline of the vehicle. The side load shall be applied to the longitudinal side farthest from the point of rear-load application. Apply side load *L* as shown in Figure C–2. The test shall be stopped when:

(1) The strain energy absorbed by the frame is equal to or greater than the required input energy E_{is}; or

(2) Deflection of the frame exceeds the allowable deflection (see paragraph (e)(1)(i) of this section); or

(3) Frame load limit occurs before the allowable deflection is reached in side load (see Figure C–5).

(G) Using data obtained in paragraph (d)(2)(iii)(F) of this section, construct the *L–D* diagram as shown in Figure C–5;

(H) Calculate E_{is};

(I) Calculate FER_{is}; and

(J) Calculate *FSB* as required by paragraph (d)(2)(i)(C) of this section.

(3) *Dynamic test procedure.* (i) The following test conditions shall be met:

(A) The protective frame and tractor shall be tested at the weight defined by 29 CFR 1928.51(a);

(B) The dynamic loading shall be accomplished by using a 4,410-lb (2,000-kg) weight acting as a pendulum. The impact face of the weight shall be 27 ± 1 in. by 27 ± 1 in. (686 ± 25 mm by 686 ± 25 mm), and shall be constructed so that its center of gravity is within 1.0 in. (25.4 mm) of its geometric center. The weight shall be suspended from a pivot point 18 to 22 ft (5.5 to 6.7 m) above the point of impact on the frame, and shall be conveniently and safely adjustable for height (see Figure C–6);

(C) For each phase of testing, the tractor shall be restrained from moving when the dynamic load is applied. The restraining members shall have strength no less than, and elasticity no greater than, that of 0.50-in. (12.7-mm) steel cable. Points of attachment for the restraining members shall be located an appropriate distance behind the rear axle and in front of the front axle to provide a 15° to 30° angle between a restraining cable and the horizontal. For impact from the rear, the restraining cables shall be located in the plane in which the center of gravity of the pendulum will swing, or alternatively, two sets of symmetrically located cables may be used at lateral locations on the tractor. For impact from the side, restraining cables shall be used as shown in Figures C–8 and C–9;

(D) The front and rear wheel-tread settings, when adjustable, shall be at the position nearest to halfway between the minimum and maximum settings obtainable on the vehicle. When only two settings are obtainable, the minimum setting shall be used. The tires shall have no liquid ballast, and shall be inflated to the maximum operating pressure recommended by the manufacturer. With the specified tire inflation, the restraining cable shall be tightened to provide tire deflection of 6 to 8 percent of the nominal tire-section width. After the vehicle is restrained properly, a wooden beam no less than 6-in. x 6-in. (150-mm x 150-mm) in cross section shall be driven tightly against the appropriate wheels and clamped. For the test to the side, an additional wooden beam shall be placed as a prop against the wheel nearest to the operator's station, and shall be secured to the base so that it is held tightly against the wheel rim during impact. The length of this beam shall be chosen so that it is at an angle of 25° to 40° to the horizontal when it is positioned against the wheel rim. It shall have a length 20 to 25 times its depth, and a width two to three times its depth (see Figures C–8 and C–9);

(E) Means shall be provided for indicating the maximum instantaneous deflection along the line of impact. A simple friction device is illustrated in Figure C–4;

(F) No repairs or adjustments shall be made during the test; and

(G) When any cables, props, or blocking shift or break during the test, the test shall be repeated.

(ii) H = Vertical height of the center of gravity of a 4,410-lb (2,000-kg) weight in in. (H' in mm). The weight shall be pulled back so that the height of its center of gravity above the point of impact is: $H = 4.92 + 0.00190\ W$ ($H' = 125 \pm 0.170\ W'$) (see Figure C–7).

(iii) The test procedures shall be as follows:

(A) The frame shall be evaluated by imposing dynamic loading from the rear, followed by a load to the side on the same frame. The pendulum swinging from the height determined by paragraph (d)(3)(ii) of this section shall be used to impose the dynamic load. The position of the pendulum shall be so selected that the initial point of impact on the frame is in line with the arc of travel of the center of gravity of the pendulum. When a quick-release mechanism is used, it shall not influence the attitude of the block;

(B) *Impact at rear.* The tractor shall be restrained properly according to paragraphs (d)(3)(i)(C) and (d)(3)(i)(D) of this section. The tractor shall be positioned with respect to the pivot point of the pendulum so that the pendulum is 20° from the vertical prior to impact as shown in Figure C–8. The impact shall be applied to the upper extremity of the frame at the point that is midway between the centerline of the frame and the inside of the frame upright. When no structural cross member exists at the rear of the frame, a substitute test beam that does not add to the strength of the frame may be used to complete the test procedure; and

(C) *Impact at side.* The blocking and restraining shall conform to paragraphs (d)(3)(i)(C) and (d)(3)(i)(D) of this section. The center point of impact shall be at the upper extremity of the frame at a point most likely to hit the ground first, and at a 90° to the centerline of the vehicle (see Figure C–9). The side impact shall be applied to the longitudinal side farthest from the point of rear impact.

(4) *Field-upset test procedure.* (i) The following test conditions shall be met:

(A) The tractor shall be tested at the weight defined in 29 CFR 1928.51(a);

(B) The following provisions address soil bank test conditions.

(1) The test shall be conducted on a dry, firm soil bank. The soil in the impact area shall have an average cone index in the 0-in. to 6-in. (0-mm to 152-mm) layer of not less than 150. Cone index shall be determined according to American Society of Agricultural Engineers (''ASAE'') recommendation ASAE R313.1–1971 (''Soil cone penetrometer''), as reconfirmed in 1975, which is incorporated by reference. The incorporation by reference was approved by the Director of the Federal Register in accordance with 5 U.S.C. 552(a) and 1 CFR part 51. The path of vehicle travel shall be 12° ± 2° to the top edge of the bank.

(2) ASAE recommendation R313.1–1971, as reconfirmed in 1975, appears in the 1977 Agricultural Engineers Yearbook, or it may be examined at: Any OSHA Regional Office; the OSHA Docket Office, U.S. Department of Labor, 200 Constitution Avenue, NW., Room N–2625, Washington, DC 20210 (telephone: (202) 693–2350 (TTY number: (877) 889–5627)); or the National Archives and Records Administration (''NARA''). (For information on the availability of this material at NARA, telephone (202) 741–6030 or access the NARA Web site at *http://www.archives.gov/federal_register/code_of_federal_regulations/ibr_locations.html.*) Copies may be purchased from the American Society of Agricultural Engineers, 2950 Niles Road, St. Joseph, MI 49085.

(C) An 18-in. (457-mm) high ramp (see Figure C–10) shall be used to assist in upsetting the vehicle to the side; and

(D) The front and rear wheel-tread settings, when adjustable, shall be at the position nearest to halfway between the minimum and maximum settings obtainable on the vehicle. When only two settings are obtainable, the minimum setting shall be used.

(ii) Field upsets shall be induced to the rear and side as follows:

(A) Rear upset shall be induced by engine power, with the tractor operating in gear to obtain 3 to 5 mph (4.8 to 8.0 kph) at maximum governed engine rpm by driving forward directly up a minimum slope of 60° ± 5° as shown in Figure C–11, or by an alternative equivalent means. The engine clutch may be used to aid in inducing the upset; and

(B) To induce side upset, the tractor shall be driven under its own power along the specified path of travel at a minimum speed of 10 mph (16 kph), or at maximum vehicle speed when under 10 mph (16 kph), and over the ramp as described in paragraph (d)(4)(i)(C) of this section.

(e) *Performance requirements.* (1) *General requirements.* (i) The frame, overhead weather shield, fenders, or other parts in the operator area may be deformed in these tests, but shall not shatter or leave sharp edges exposed to the operator, or encroach on the dimensions shown in Figures C–2 and C–3, and specified as follows:

d = 2 in. (51 mm) inside of the frame upright to the vertical centerline of the seat;

e = 30 in. (762 mm) at the longitudinal centerline;

f = Not greater than 4 in. (102 mm) to the rear edge of the crossbar, measured forward of the seat-reference point (''*SRP*'');

g = 24 in. (610 mm) minimum; and

m = Not greater than 12 in. (305 mm), measured from the seat-reference point to the forward edge of the crossbar.

(ii) The protective structure and connecting fasteners must pass the static or dynamic tests described in paragraphs (d)(2), (d)(3), or (d)(4) of this section at a metal temperature of 0 °F (−18 °C) or below, or exhibit Charpy V-notch impact strengths as follows:

10-mm x 10-mm (0.394-in. x 0.394-in.) specimen: 8.0 ft-lb (10.8 J) at −20 °F (−30 °C);

10-mm x 7.5-mm (0.394-in. x 0.296-in.) specimen: 7.0 ft-lb (9.5 J) at −20 °F (−30 °C);

10-mm x 5-mm (0.394-in. x 0.197-in.) specimen: 5.5 ft-lb (7.5 J) at −20 °F (−30 °C); or

10-mm x 2.5-mm (0.394-in. x 0.098-in.) specimen: 4.0 ft-lb (5.5 J) at −20 °F (−30 °C).

Specimens shall be longitudinal and taken from flat stock, tubular, or structural sections before forming or welding for use in the frame. Specimens from tubular or structural sections shall be taken from the middle of the side of greatest dimension, not to include welds.

(2) *Static test-performance requirements.* In addition to meeting the requirements of paragraph (e)(1) of this section for both side and rear loads, FER_{is} and FER_{ir}, shall be greater than 1.0, and when the ROPS contains one or two upright frames only, *FSB* shall be greater than 1.3.

(3) *Dynamic test-performance requirements.* The structural requirements shall be met when the dimensions in paragraph (e)(1) of this section are used in both side and rear loads.

(4) *Field-upset test performance requirements.* The requirements of paragraph (e)(1) of this section shall be met for both side and rear upsets.

§ 1928.53 Protective enclosures for wheel-type agricultural tractors—test procedures and performance requirements.

(a) *Purpose.* The purpose of this section is to establish the test and performance requirements for a protective enclosure designed for wheel-type agricultural tractors to minimize the frequency and severity of operator injury resulting from accidental upset. General requirements for the protection of operators are specified in 29 CFR 1928.51.

(b) *Types of tests.* All protective enclosures for wheel-type agricultural tractors shall be of a model that has been tested as follows:

(1) *Laboratory test.* A laboratory energy-absorption test, either static or dynamic, under repeatable and controlled loading, to permit analysis of the protective enclosure for compliance with the performance requirements of this standard; and

(2) *Field-upset test.* A field-upset test under controlled conditions, both to the side and rear, to verify the effectiveness of the protective system under actual dynamic conditions. This test may be omitted when:

(i) The analysis of the protective-frame static-energy absorption test results indicates that both FER_{is} and FER_{ir} (as defined in paragraph (d)(2)(ii) of this section) exceed 1.15; or

(ii) The analysis of the protective-frame dynamic-energy absorption test results indicates that the frame can withstand an impact 15 percent greater than the impact it is required to withstand for the tractor weight as shown in Figure C–7.

(c) *Description.* A protective enclosure is a structure comprising a frame and/or enclosure mounted to the tractor. A typical enclosure is shown in Figure C–12.

(d) *Test procedures.* (1) *General.* (i) The tractor weight used shall be that of the heaviest tractor model on which the protective enclosure is to be used.

(ii) Each test required under this section shall be performed on a protective enclosure with new structural members. Mounting connections of the same design shall be used during each test.

(iii) Instantaneous deflection shall be measured and recorded for each segment of the test; see paragraph (e)(1)(i) of this section for permissible deflections.

(iv) The seat-reference point (''*SRP*'') in Figure C–14 is that point where the vertical line that is tangent to the most forward point at the longitudinal seat centerline of the seat back, and the horizontal line that is tangent to the highest point of the seat cushion, intersect in the longitudinal seat section. The seat-reference point shall be determined with the seat unloaded and adjusted to the highest and most rearward position provided for seated operations of the tractor.

(v) When the centerline of the seat is off the longitudinal center, the protective-enclosure loading shall be on the side with least space between the centerline of the seat and the protective enclosure.

(vi) Low-temperature characteristics of the protective enclosure or its material shall be demonstrated as

specified in paragraph (e)(1)(ii) of this section.

(vii) Rear input energy tests (static, dynamic, or field-upset) need not be performed on enclosures mounted to tractors having four driven wheels and more than one-half their unballasted weight on the front wheels.

(viii) Accuracy table:

Measurements	Accuracy
Deflection of the enclosure, in. (mm)	± 5 percent of the deflection measured.
Vertical weight, pounds (kg)	± 5 percent of the weight measured.
Force applied to the enclosure, pounds force (newtons)	± 5 percent of the force measured.
Dimensions of the critical zone, in. (mm)	± 0.5 in. (12.5 mm).

(ix) When movable or normally removable portions of the enclosure add to structural strength, they shall be placed in configurations that contribute least to structural strength during the test.

(2) *Static test procedure.* (i) The following test conditions shall be met:

(A) The laboratory mounting base shall be the tractor chassis for which the protective enclosure is designed, or its equivalent; and

(B) The protective enclosure shall be instrumented with the necessary equipment to obtain the required load-deflection data at the locations and directions specified in Figures C–13 and C–14.

(ii) The following definitions shall apply:

W = Tractor weight (see 29 CFR 1928.31(a)) in lb (W' in kg);
E_{is} = Energy input to be absorbed during side loading in ft-lb (E'_{is} in J [joules]);
$E_{is} = 723 + 0.4\ W$ ($E'_{is} = 100 + 0.12\ W'$);
E_{ir} = Energy input to be absorbed during rear loading in ft-lb (E'_{ir} in J);
$E_{ir} = 0.47\ W$ ($E'_{ir} = 0.14\ W'$);
L = Static load, lbf [pounds force], (N) [newtons];
D = Deflection under L, in. (mm);
L–D = Static load-deflection diagram;
L_{max} = Maximum observed static load;
Load Limit = Point on a continuous L–D curve where the observed static load is 0.8 L_{max} on the down slope of the curve (see Figure C–5);
E_u = Strain energy absorbed by the protective enclosure in ft-lbs (J); area under the L–D curve;
FER = Factor of energy ratio;
$FER_{is} = E_u/E_{is}$; and
$FER_{ir} = E_u/E_{ir}$

(iii) The test procedures shall be as follows:

(A) When the protective-frame structures are not an integral part of the enclosure, the direction and point of load application for both side and rear shall be the same as specified in 29 CFR 1928.52(d)(2);

(B) When the protective-frame structures are an integral part of the enclosure, apply the rear load according to Figure C–14, and record L and D simultaneously. Rear-load application shall be distributed uniformly on the frame structure over an area perpendicular to the load application, no greater than 160 sq. in. (1,032 sq. cm) in size, with the largest dimension no greater than 27 in. (686 mm). The load shall be applied to the upper extremity of the structure at the point that is midway between the centerline of the protective enclosure and the inside of the protective structure. When no structural cross member exists at the rear of the enclosure, a substitute test beam that does not add strength to the structure may be used to complete this test procedure. The test shall be stopped when:

(1) The strain energy absorbed by the structure is equal to or greater than the required input energy E_{ir}; or

(2) Deflection of the structure exceeds the allowable deflection (see paragraph (e)(1)(i) of this section); or

(3) The structure load limit occurs before the allowable deflection is reached in rear load (see Figure C–5);

(C) Using data obtained in paragraph (d)(2)(iii)(B) of this section, construct the L–D diagram for rear loads as shown in Figure C–5;

(D) Calculate E_{ir};

(E) Calculate FER_{ir};

(F) When the protective-frame structures are an integral part of the enclosure, apply the side load according to Figure C–13, and record L and D simultaneously. Static side-load application shall be distributed uniformly on the frame over an area perpendicular to the direction of load application, and no greater than 160 sq. in. (1,032 sq. cm) in size, with the largest dimension no greater than 27 in. (686 mm). Side-load application shall be at a 90° angle to the centerline of the vehicle. The center of the side-load application shall be located between point k, 24 in. (610 mm) forward of the seat-reference point, and point l, 12 in. (305 mm) rearward of the seat-reference point, to best use the structural strength (see Figure C–13). This side load shall be applied to the longitudinal side farthest from the point of rear-load application. The test shall be stopped when:

(1) The strain energy absorbed by the structure is equal to or greater than the required input energy E_{is}; or

(2) Deflection of the structure exceeds the allowable deflection (see paragraph (e)(1)(i) of this section); or

(3) The structure load limit occurs before the allowable deflection is reached in side load (see Figure C–5);

(G) Using data obtained in paragraph (d)(2)(iii)(F) of this section, construct the L–D diagram for the side load as shown in Figure C–5;

(H) Calculate FER_{is}; and

(I) Calculate FER_{ir}.

(3) *Dynamic test procedure.* (i) The following test conditions shall be met:

(A) The protective enclosure and tractor shall be tested at the weight defined by 29 CFR 1928.51(a);

(B) The dynamic loading shall be accomplished by using a 4,410-lb (2,000-kg) weight acting as a pendulum. The impact face of the weight shall be 27 ± 1 in. by 27 ± 1 in. (686 ± 25 mm by 686 ± 25 mm), and shall be constructed so that its center of gravity is within 1.0 in. (25.4 mm) of its geometric center. The weight shall be suspended from a pivot point 18 to 22 ft (5.5 to 6.7 m) above the point of impact on the enclosure, and shall be conveniently and safely adjustable for height (see Figure C–6);

(C) For each phase of testing, the tractor shall be restrained from moving when the dynamic load is applied. The restraining members shall have strength no less than, and elasticity no greater than, that of 0.50-in. (12.7-mm) steel cable. Points of attachment for the restraining members shall be located an appropriate distance behind the rear axle and in front of the front axle to provide a 15° to 30° angle between the restraining cable and the horizontal. For impact from the rear, the restraining cables shall be located in the plane in which the center of gravity of the pendulum will swing, or alternatively, two sets of symmetrically located cables may be used at lateral locations on the tractor. For the impact from the side, restraining cables shall be used as shown in Figures C–15 and C–16;

(D) The front and rear wheel-tread settings, when adjustable, shall be at the position nearest to halfway between the minimum and maximum settings obtainable on the vehicle. When only two settings are obtainable, the minimum setting shall be used. The tires shall have no liquid ballast, and shall be inflated to the maximum operating pressure recommended by the manufacturer. With specified tire inflation, the restraining cable shall be tightened to provide tire deflection of 6 to 8 percent of nominal tire section width. After the vehicle is retrained properly, a wooden beam no smaller than 6-in. x 6-in. (150-mm x 150-mm) cross-section shall be driven tightly against the appropriate wheels and clamped. For the test to the side, an additional wooden beam shall be placed as a prop against the wheel nearest the operator's station, and shall be secured to the base so that it is held tightly against the wheel rim during impact. The length of this beam shall be chosen so that it is at an angle of 25° to 40° to the horizontal when it is positioned against the wheel rim. It shall have a length 20 to 25 times its depth, and a width two to three times its depth (see Figures C–15 and C–16);

(E) Means shall be provided for indicating the maximum instantaneous deflection along the line of impact. A simple friction device is illustrated in Figure C–4;

(F) No repair or adjustments shall be made during the test; and

(G) When any cables, props, or blocking shift or break during the test, the test shall be repeated.

(ii) H = Vertical height of the center of gravity of a 4,410-lb (2,000-kg) weight in in. (H' in mm). The weight shall be pulled back so that the height of its center of gravity above the point of impact is: $H = 4.92 + 0.00190\ W$ ($H' = 125 + 0.107\ W'$) (see Figure C–7).

(iii) The test procedures shall be as follows:

(A) The enclosure structure shall be evaluated by imposing dynamic loading from the rear, followed by a load to the side on the same enclosure structure. The pendulum swinging from the height determined by paragraph (d)(3)(ii) of this section shall be used to impose the dynamic load. The position of the pendulum shall be so selected that the initial point of impact on the protective structure is in line with the arc of travel of the center of gravity of the pendulum. When a quick-release mechanism is used, it shall not influence the attitude of the block;

(B) *Impact at rear.* The tractor shall be restrained properly according to paragraphs (d)(3)(i)(C) and (d)(3)(i)(D) of this section. The tractor shall be positioned with respect to the pivot point of the pendulum so that the pendulum is 20° from the vertical prior to impact as shown in Figure C–15. The impact shall be applied to the upper extremity of the enclosure structure at the point that is midway between the centerline of the enclosure structure and the inside of the protective structure. When no structural cross member exists at the rear of the enclosure structure, a substitute test beam that does not add to the strength of the structure may be used to complete the test procedure; and

(C) *Impact at side.* The blocking and restraining shall conform to paragraphs (d)(3)(i)(C) and (d)(3)(i)(D) of this section. The center point of impact shall be at the upper extremity of the enclosure at a 90° angle to the centerline of the vehicle, and located between a point *k,* 24 in. (610 mm) forward of the seat-reference point, and a point *l,* 12 in. (305 mm) rearward of the seat-reference point, to best use the structural strength (see Figure C–13). The side impact shall be applied to the longitudinal side farthest from the point of rear impact.

(4) *Field-upset test procedure.* (i) The following test conditions shall be met:

(A) The tractor shall be tested at the weight defined in 29 CFR 1928.51(a);

(B) The following provisions address soil bank test conditions.

(1) The test shall be conducted on a dry, firm soil bank. The soil in the impact area shall have an average cone index in the 0-in. to 6-in. (0-mm to 152-mm) layer of not less than 150. Cone index shall be determined according to American Society of Agricultural Engineers (''ASAE'') recommendation ASAE R313.1–1971 (''Soil cone penetrometer''), as reconfirmed in 1975, which is incorporated by reference. The incorporation by reference was approved by the Director of the Federal Register in accordance with 5 U.S.C. 552(a) and 1 CFR part 51. The path of vehicle travel shall be 12° ± 2° to the top edge of the bank.

(2) ASAE recommendation R313.1–1971, as reconfirmed in 1975, appears in the 1977 Agricultural Engineers Yearbook, or it may be examined at: Any OSHA Regional Office; the OSHA Docket Office, U.S. Department of Labor, 200 Constitution Avenue, NW., Room N–2625, Washington, DC 20210 (telephone: (202) 693–2350 (TTY number: (877) 889–5627)); or the National Archives and Records Administration (''NARA''). (For information on the availability of this material at NARA, telephone (202) 741–6030 or access the NARA Web site at *http://www.archives.gov/federal_register/code_of_federal_regulations/ibr_locations.html.*) Copies may be purchased from the American Society of Agricultural Engineers 2950 Niles Road, St. Joseph, MI 49085.

(C) An 18-in. (457 mm) high ramp (see Figure C–10) shall be used to assist in upsetting the vehicle to the side; and

(D) The front and rear wheel-tread settings, when adjustable, shall be at the position nearest to halfway between the minimum and maximum settings obtainable on the vehicle. When only two settings are obtainable, the minimum setting shall be used.

(ii) Field upsets shall be induced to the rear and side.

(A) Rear upset shall be induced by engine power, with the tractor operating in gear to obtain 3 to 5 mph (4.8 to 8.0 kph) at maximum governed engine rpm by driving forward directly up a minimum slope of 60° ± 5° as shown in Figure C–11, or by an alternate equivalent means. The engine clutch may be used to aid in inducing the upset; and

(B) To induce side upset, the tractor shall be driven under its own power along the specified path of travel at a minimum speed of 10 mph (16 kph), or at maximum vehicle speed when under 10 mph (16 kph), and over the ramp as described in paragraph (d)(4)(i)(C) of this section.

(e) *Performance requirements.* (1) *General requirements.* (i) The protective enclosure structural members or other parts in the operator area may be deformed in these tests, but shall not shatter or leave sharp edges exposed to the operator. They shall not encroach on a transverse plane passing through points *d* and *f* within the projected area defined by dimensions *d, e,* and *g,* or on the dimensions shown in Figures C–13 and C–14, as follows:

d = 2 in. (51 mm) inside of the protective structure to the vertical centerline of the seat;
e = 30 in. (762 mm) at the longitudinal centerline;
f = Not greater than 4 in. (102 mm) measured forward of the seat-reference point (''*SRP*'') at the longitudinal centerline as shown in Figure C–14;
g = 24 in. (610 mm) minimum;
h = 17.5 in. (445 mm) minimum; and
j = 2.0 in. (51 mm) measured from the outer periphery of the steering wheel.

(ii) The protective structure and connecting fasteners must pass the static or dynamic tests described in paragraphs (d)(2), (d)(3), or (d)(4) of this section at a metal temperature of 0 °F (−8 °C) or below, or exhibit Charpy V-notch impact strengths as follows:

10-mm x 10-mm (0.394-in. x 0.394-in.) specimen: 8.0 ft-lb (10.8 J) at −20 °F (−30 °C);
10-mm x 7.5-mm (0.394-in. x 0.296-in.) specimen: 7.0 ft-lb (9.5 J) at −20 °F (−30 °C);
10-mm x 5-mm (0.394-in. x 0.197-in.) specimen: 5.5 ft-lb (7.5 J) at −20 °F (−30 °C); or
10-mm x 2.5-mm (0.394-in. x 0.098-in.) specimen: 4.0 ft-lb (5.5 J) at −20 °F (−30 °C).

Specimens shall be longitudinal and taken from flat stock, tubular, or structural sections before forming or welding for use in the protective enclosure. Specimens from tubular or structural sections shall be taken from the middle of the side of greatest dimension, not to include welds.

(iii) The following provisions address glazing requirements.

(A) Glazing shall conform to the requirements contained in Society of Automotive Engineers (''SAE'') standard J674–1963 (''Safety glazing materials''), which is incorporated by reference. The incorporation by reference was approved by the Director of the Federal Register in accordance with 5 U.S.C. 552(a) and 1 CFR part 51.

(B) SAE standard J674–1963 appears in the 1965 SAE Handbook, or it may be examined at: any OSHA Regional Office; the OSHA Docket Office, U.S. Department of Labor, 200 Constitution Avenue, NW., Room N–2625, Washington, DC 20210 (telephone: (202) 693–2350 (TTY number: (877) 889–5627)); or the National Archives and Records Administration (''NARA''). (For information on the availability of this material at NARA, telephone (202) 741–6030 or access the NARA Web site at *http://www.archives.gov/federal_register/code_of_federal_regulations/ibr_locations.html.*) Copies may be purchased from the Society of Automotive Engineers, 400 Commonwealth Drive, Warrendale, Pennsylvania 15096–0001.

(iv) Two or more operator exits shall be provided and positioned to avoid the possibility of both being blocked by the same accident.

(2) *Static test-performance requirements.* In addition to meeting the requirements of paragraph (e)(1) of this section for both side and rear loads, FER_{is} and FER_{ir} shall be greater than 1.0.

(3) *Dynamic test-performance requirements.* The structural requirements shall be met when the dimensions in paragraph (e)(1) of this section are used in both side and rear loads.

(4) *Field-upset test performance requirements.* The requirements of paragraph (e)(1) of this section shall be met for both side and rear upsets.

Appendix B to Subpart C—Figures C–1 through C–16

BILLING CODE 4510–16–P

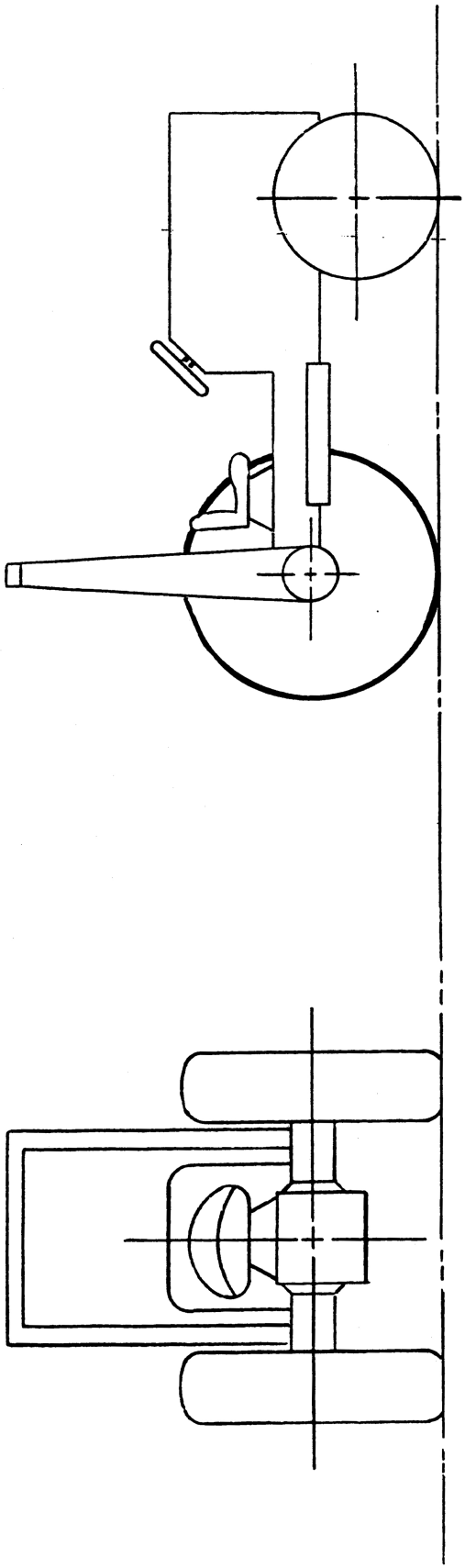

FIG. C-1 TRACTOR WITH TYPICAL PROTECTIVE FRAME

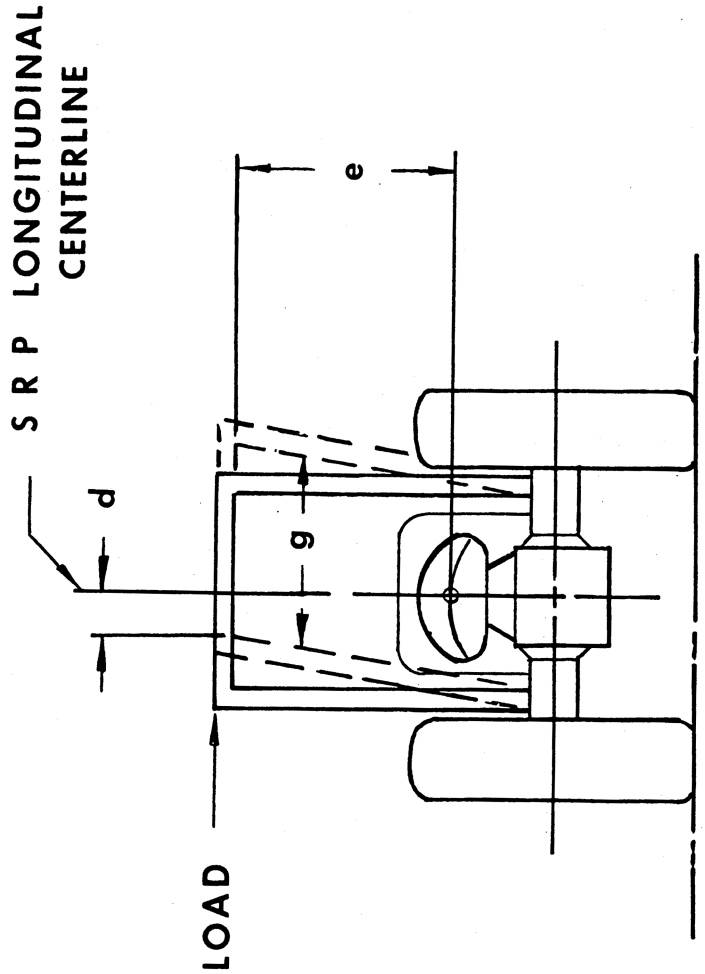

FIG. C-2 SIDE LOAD APPLICATION

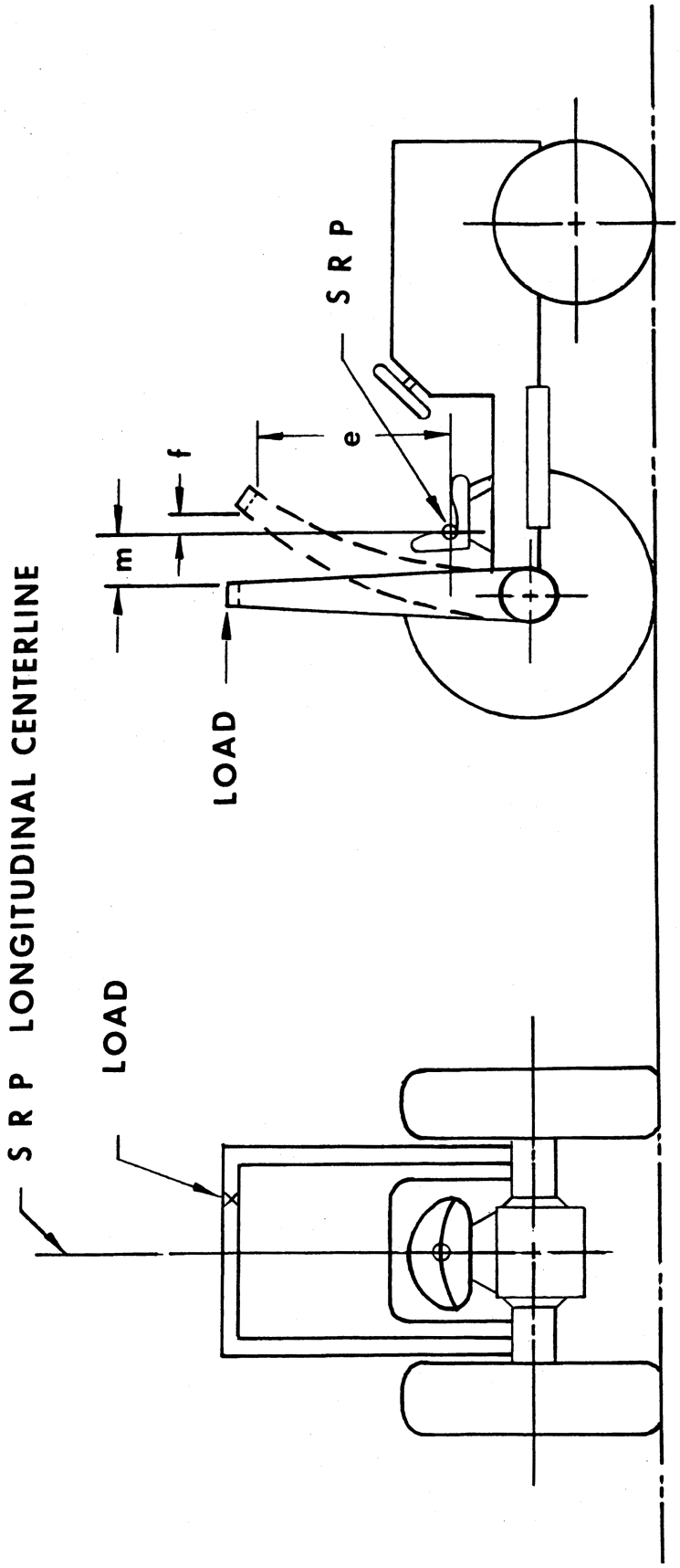

FIG. C-3 REAR LOAD APPLICATION

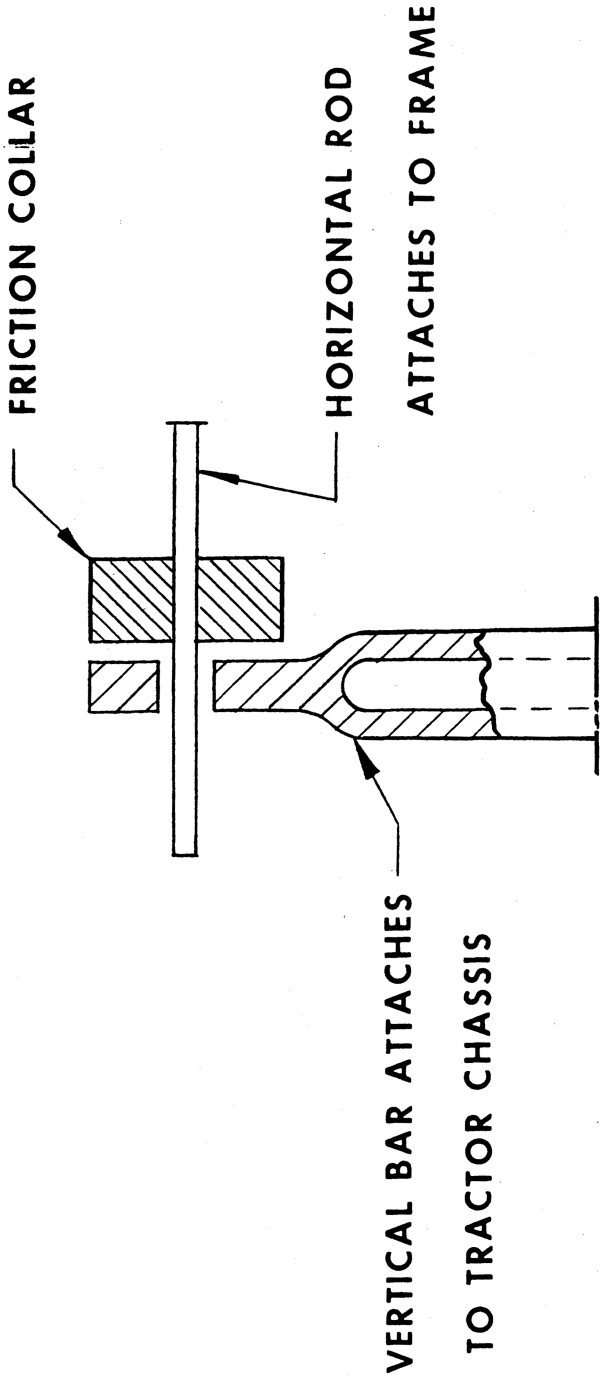

FIG. C-4 TYPICAL METHOD OF MEASURING DEFLECTION

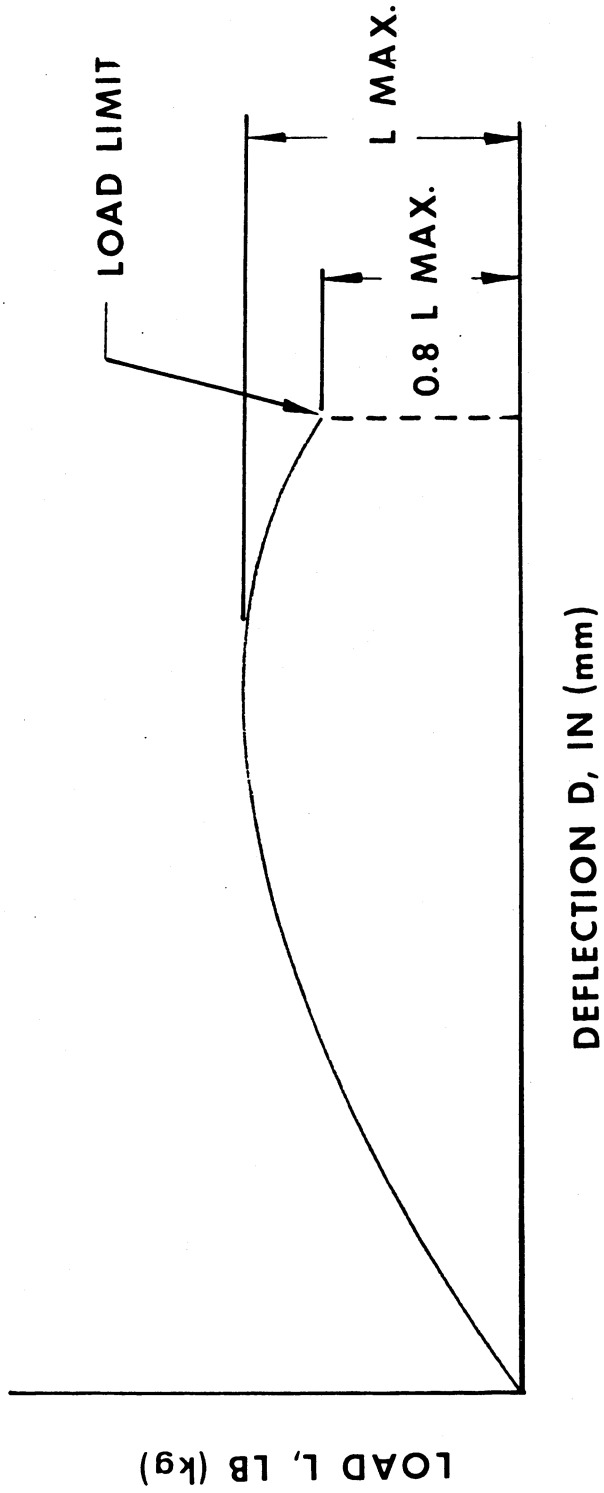

FIG. C-5 TYPICAL L-D DIAGRAM

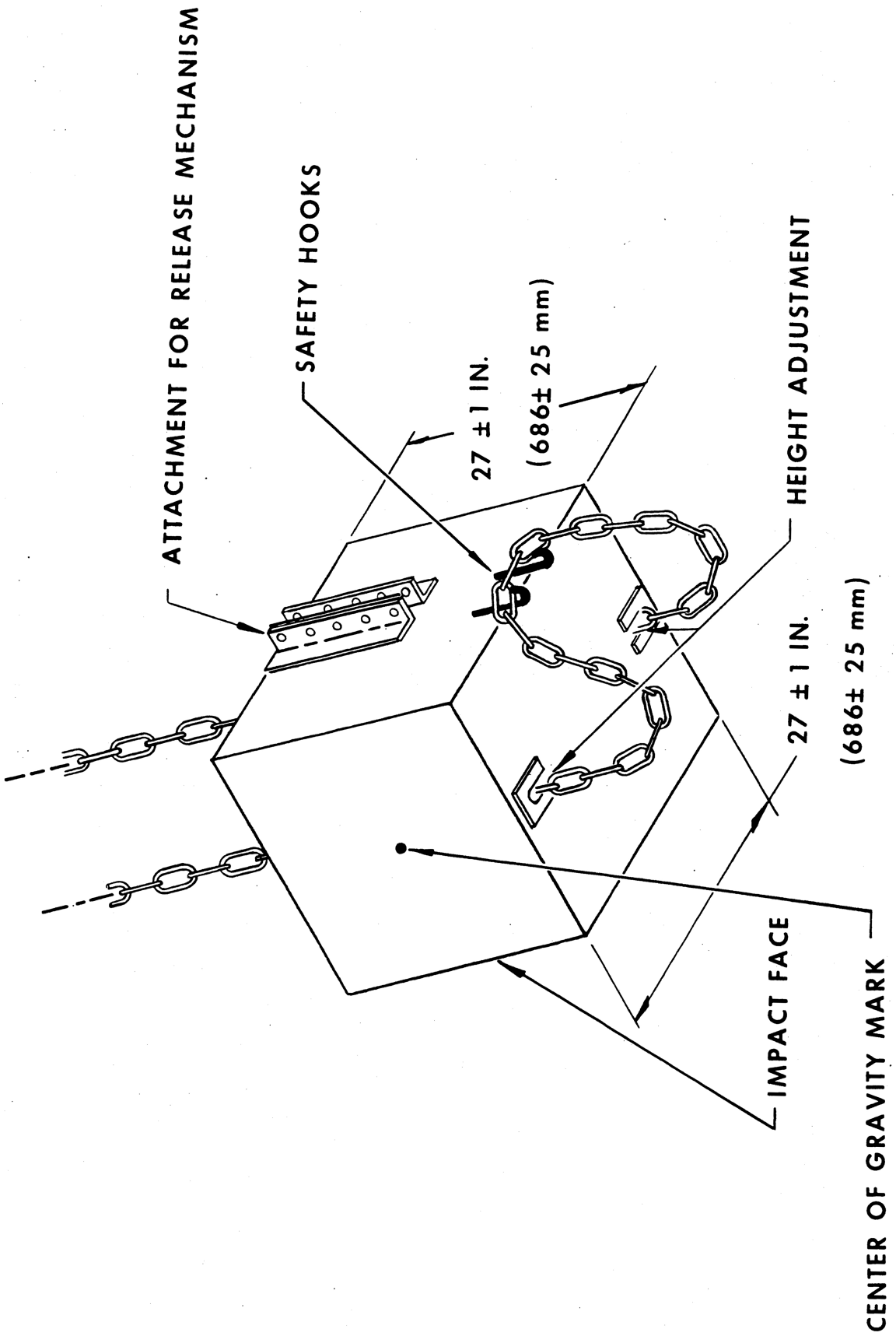

FIG. C-6 PENDULUM

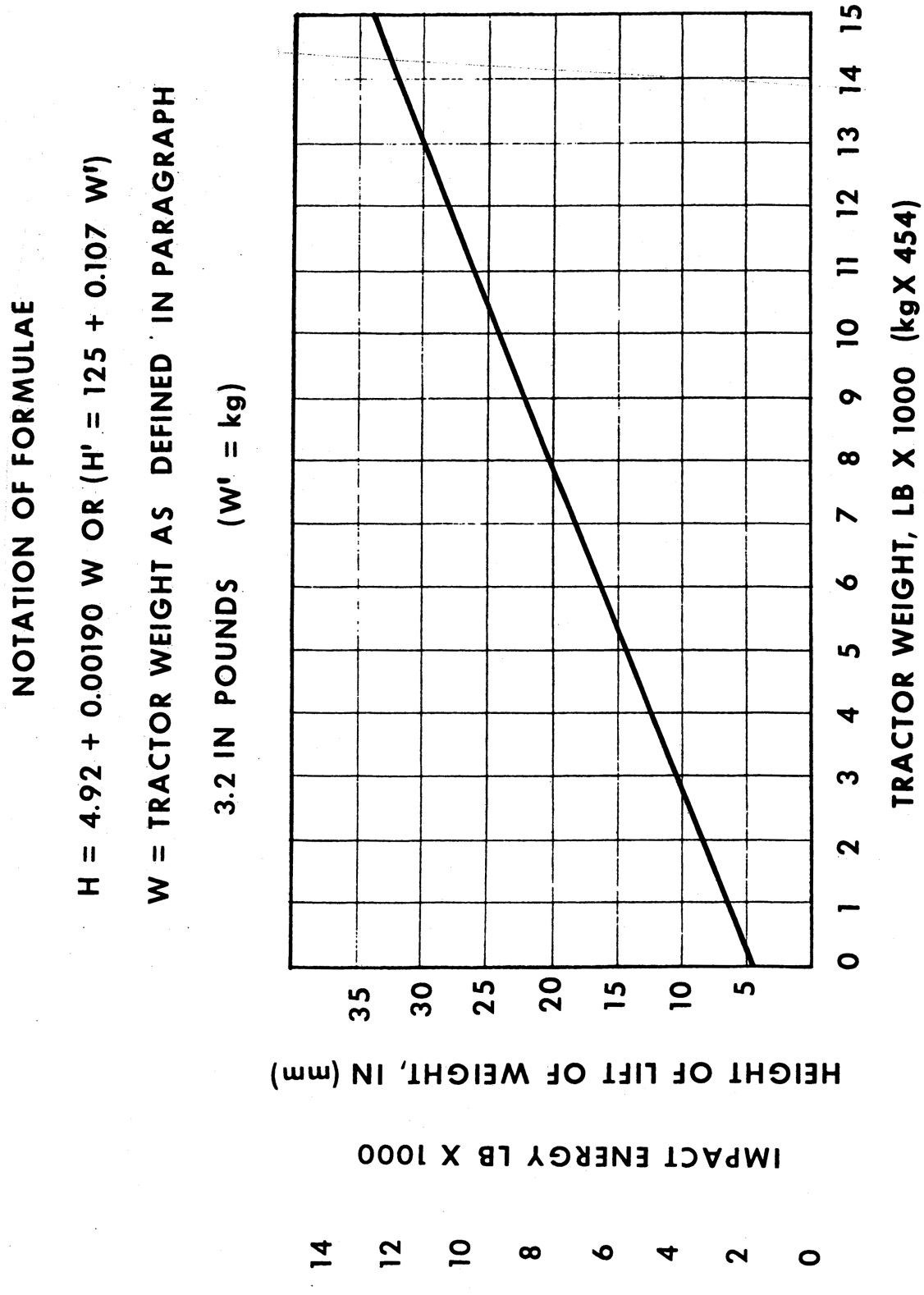

FIG. C-7 IMPACT ENERGY AND CORRESPONDING LIFT HEIGHT OF 4410 LB. (2000 kg) WEIGHT

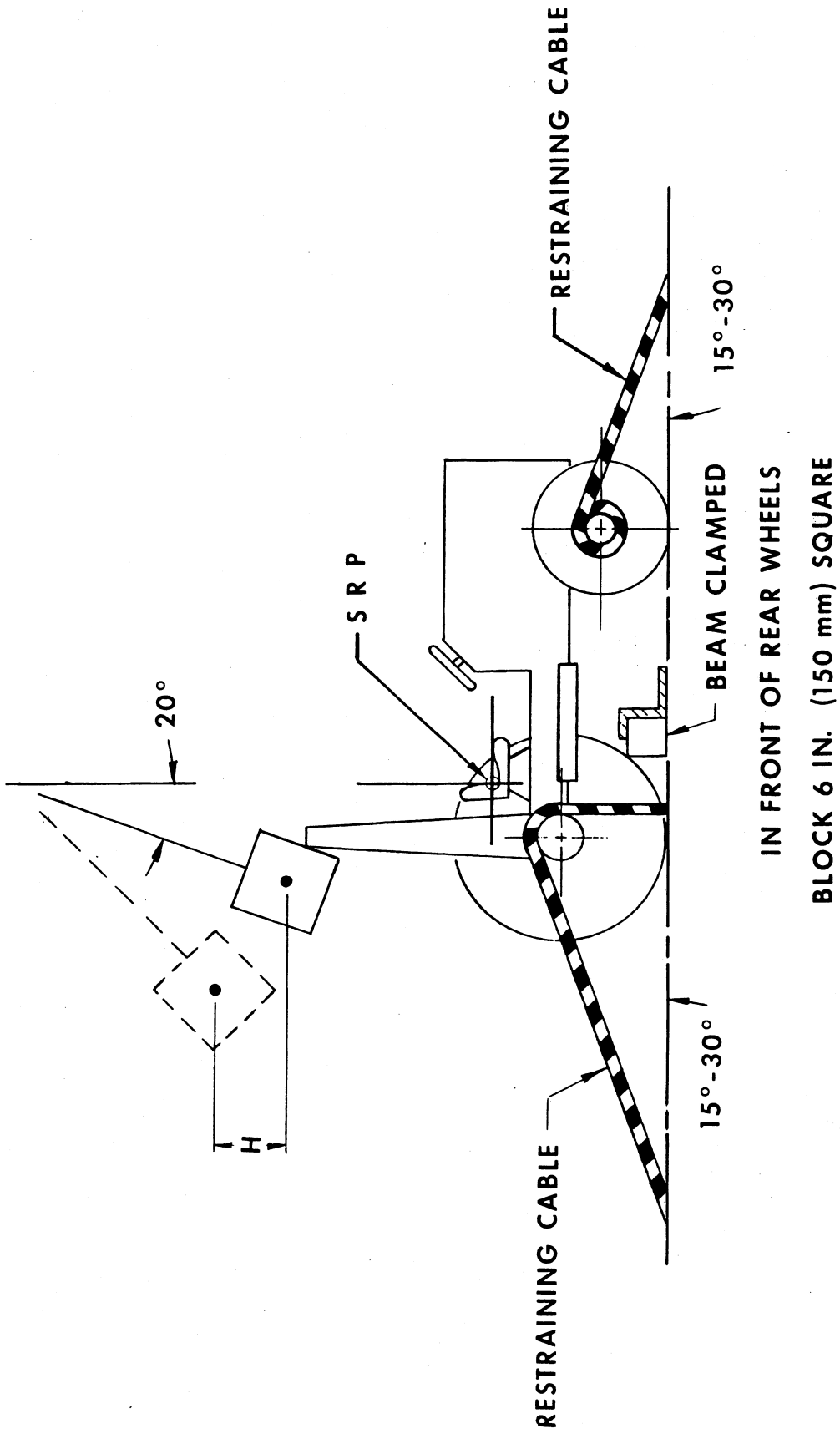

FIG. C-8 REAR IMPACT APPLICATION

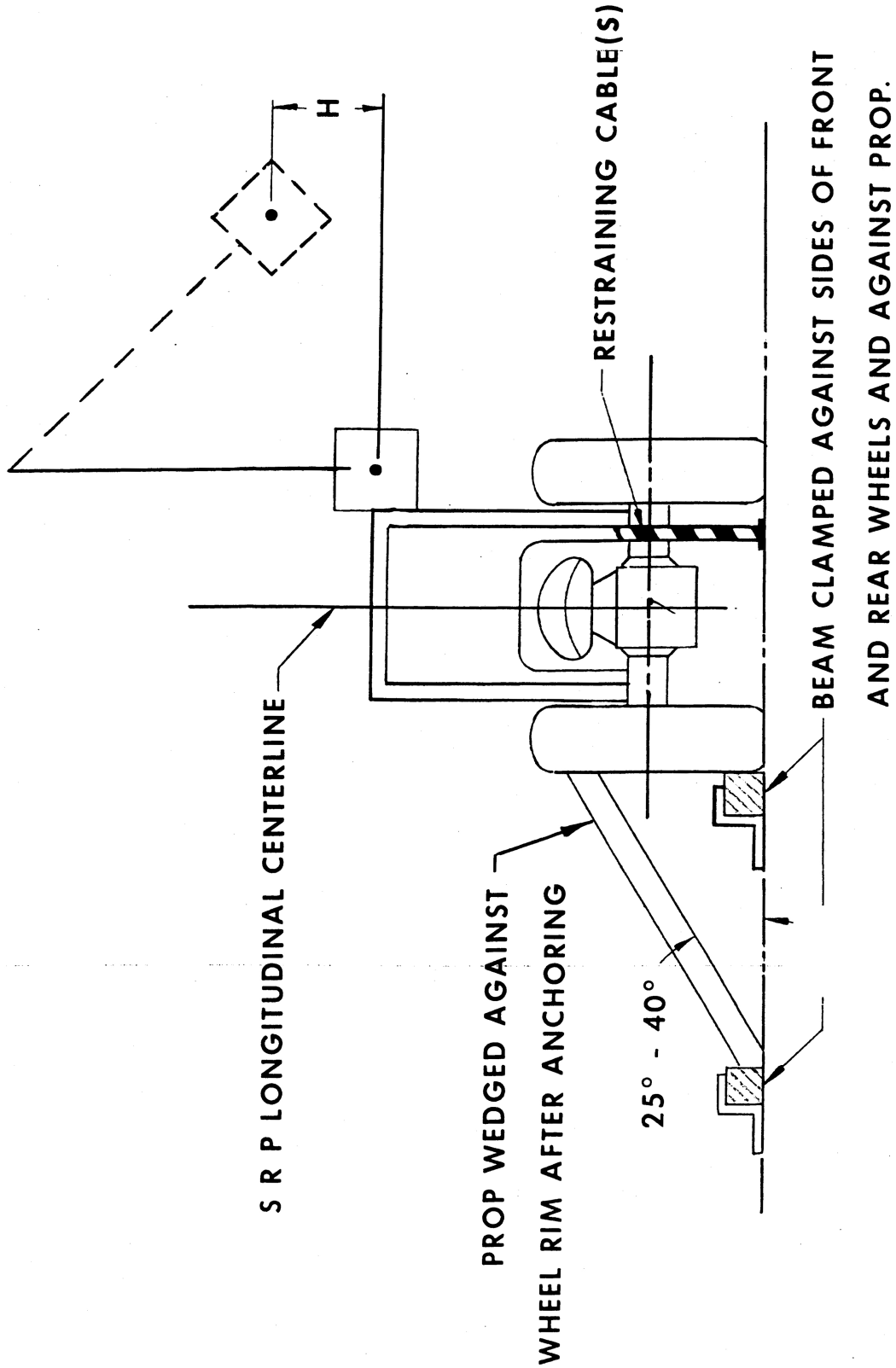

FIG. C-9 SIDE IMPACT APPLICATION

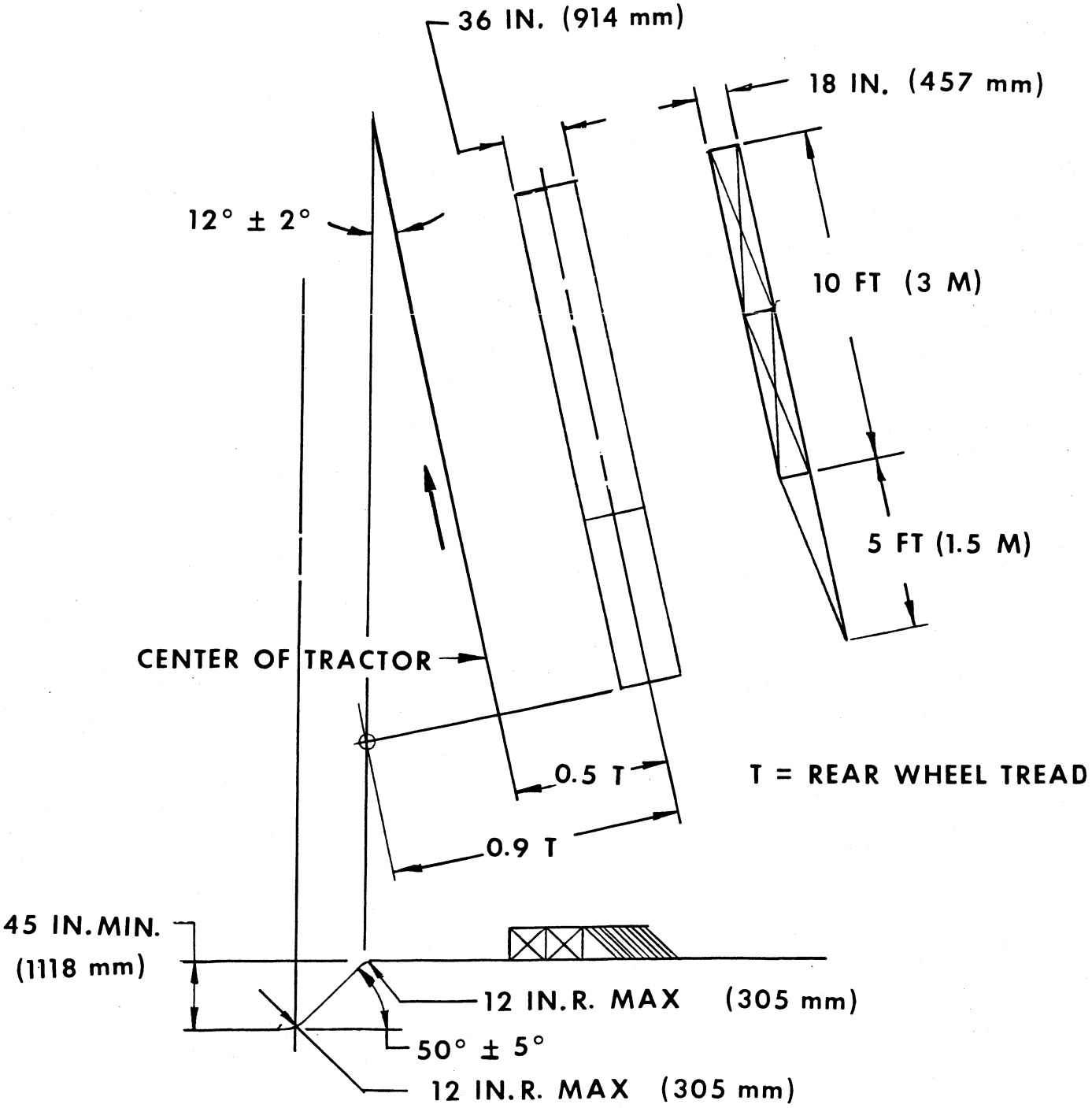

FIG. C-10 SIDE OVERTURN BANK AND RAMP

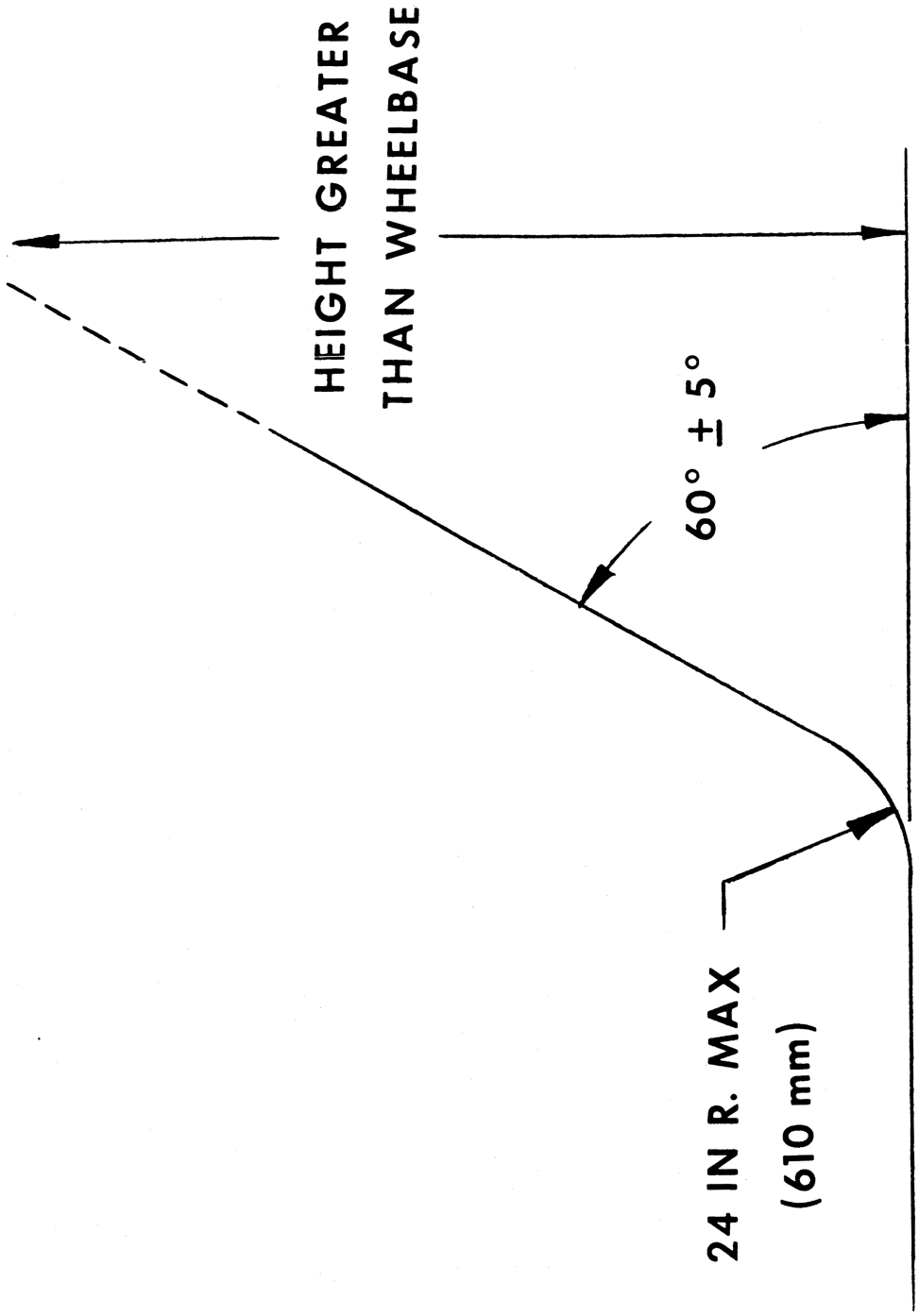

FIG. C-11 TYPICAL REAR OVERTURN BANK

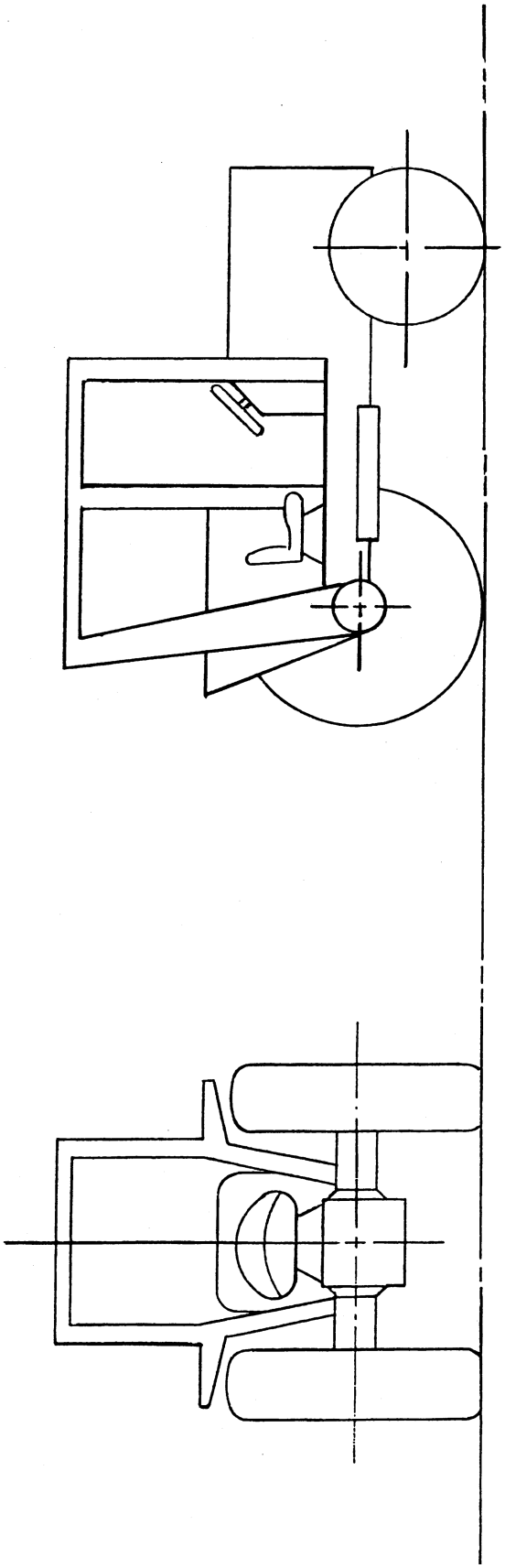

FIG. C-12 TRACTOR WITH TYPICAL PROTECTIVE ENCLOSURE

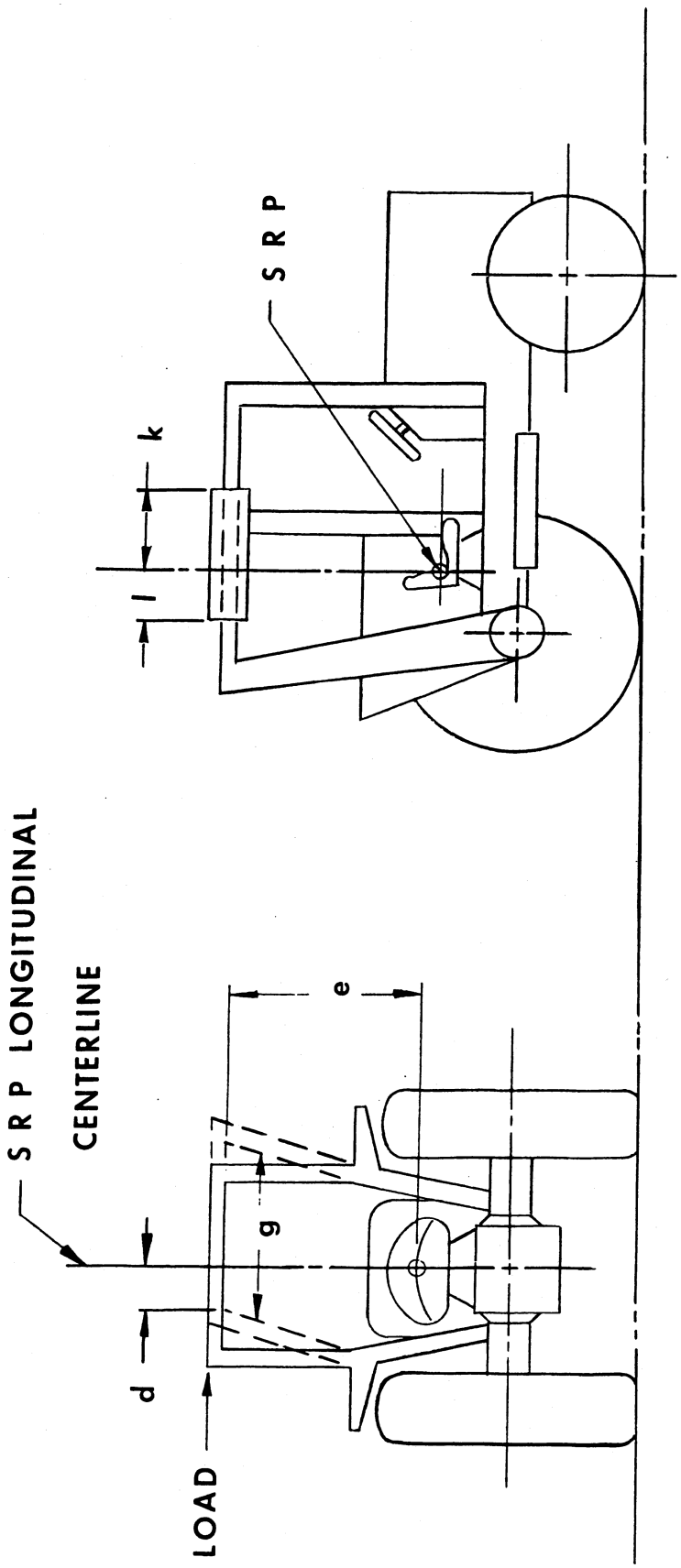

FIG. C-13 SIDE LOAD APPLICATION

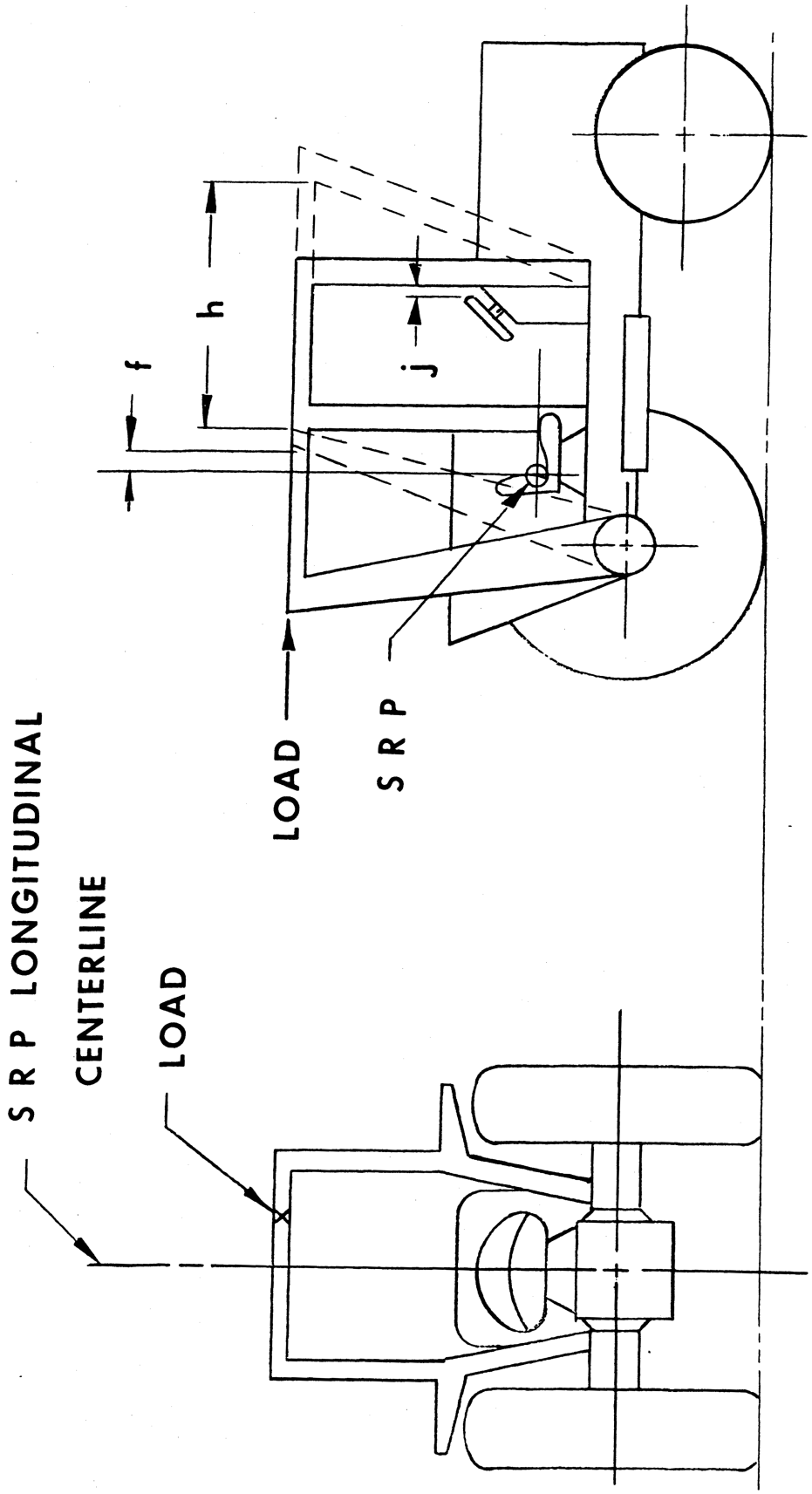

FIG. C-14 REAR LOAD APPLICATION

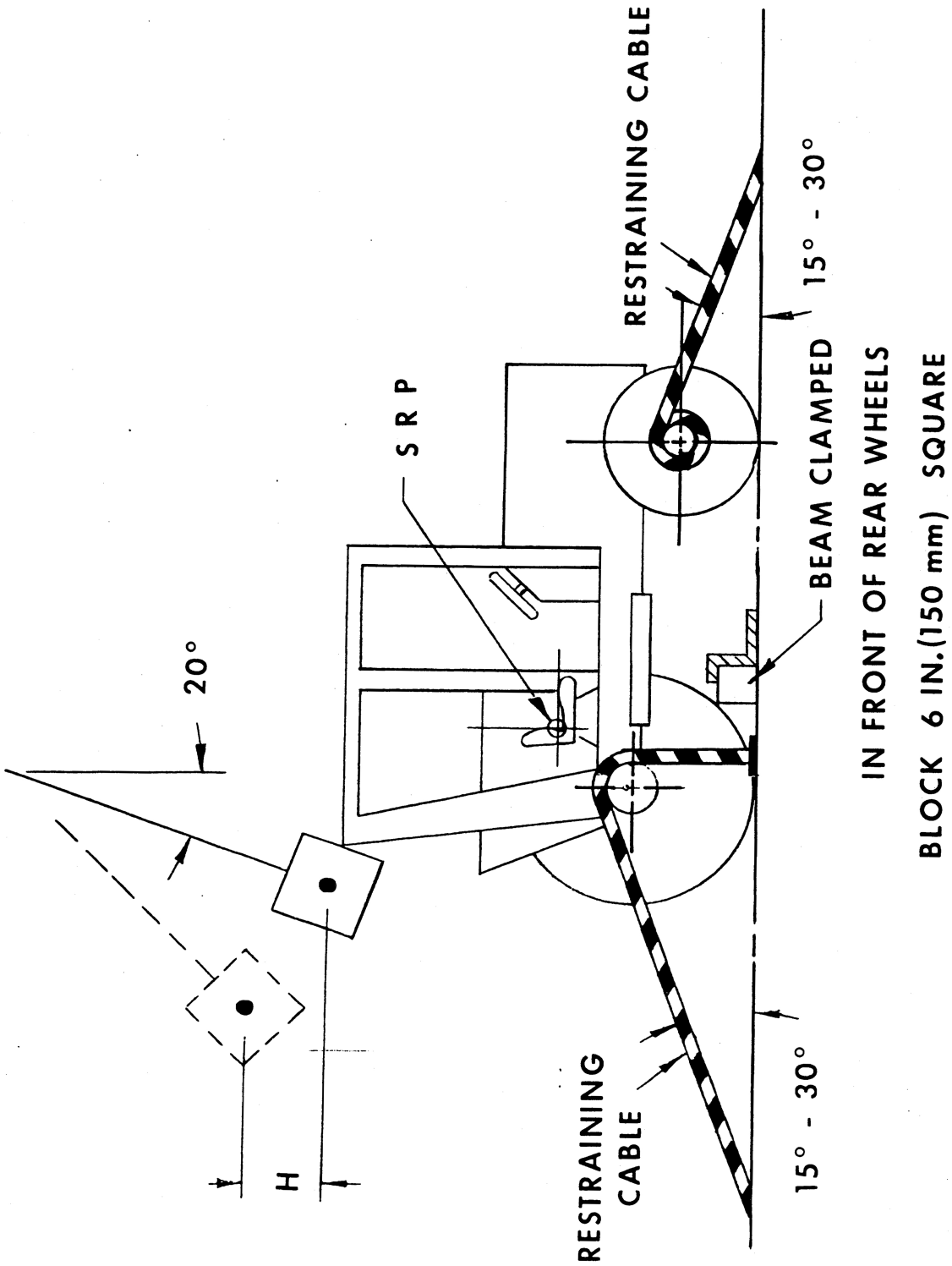

FIG. C-15 REAR IMPACT APPLICATION

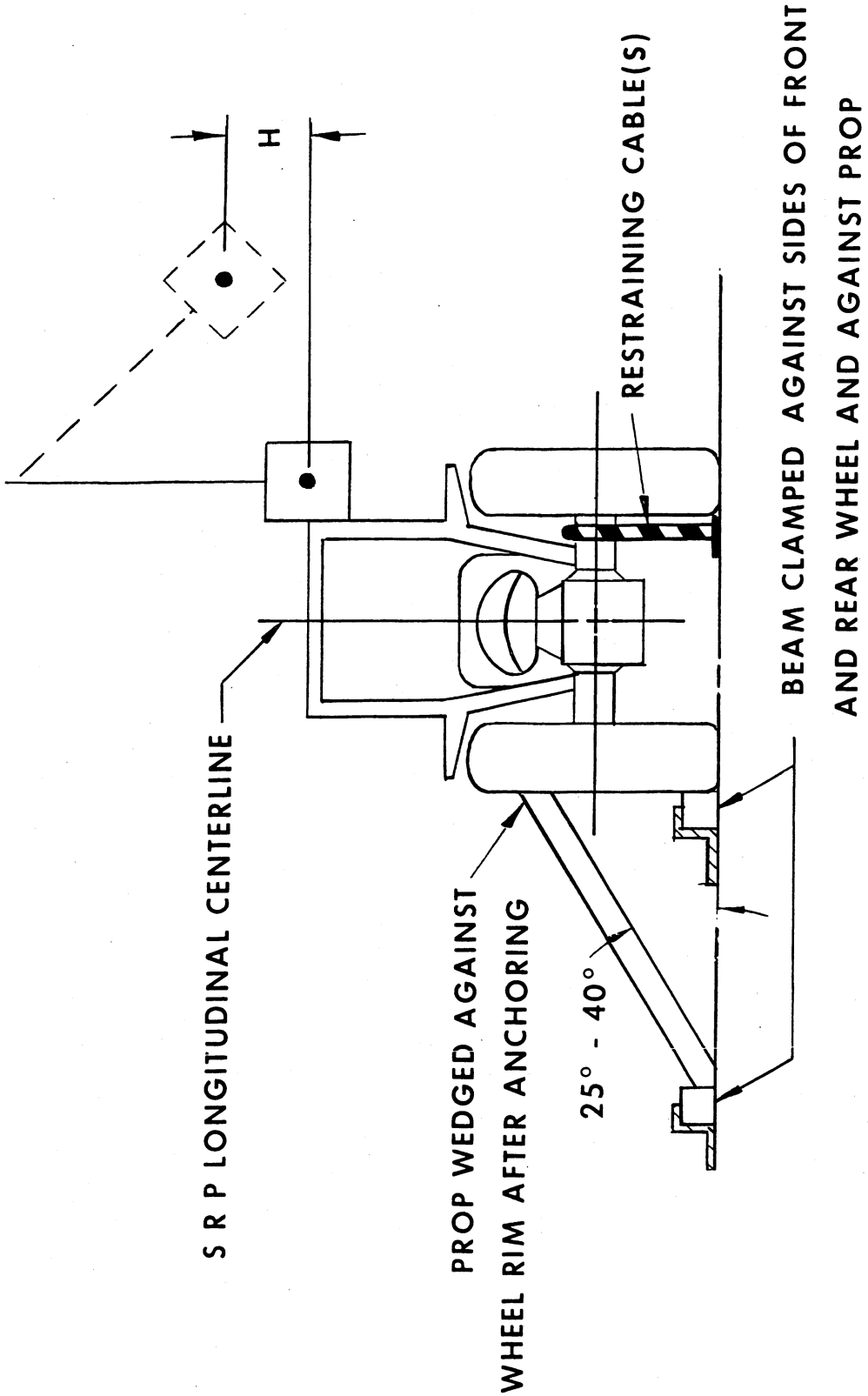

FIG. C-16 SIDE IMPACT APPLICATION

[FR Doc. 05–24462 Filed 12–28–05; 8:45 am]
BILLING CODE 4510–26–C